molex

MX150 RECEPTACLE 2X10 SEALED ASSEMBLY MAT SEAL
BOM AND PIN OUT SHEET

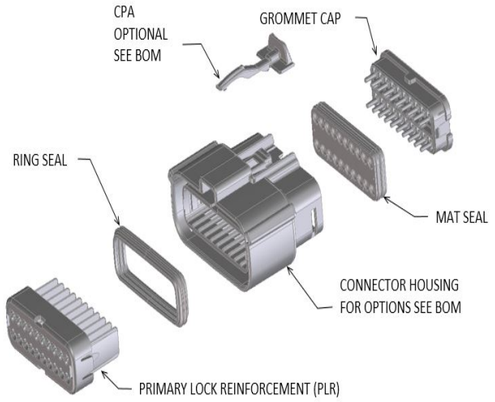

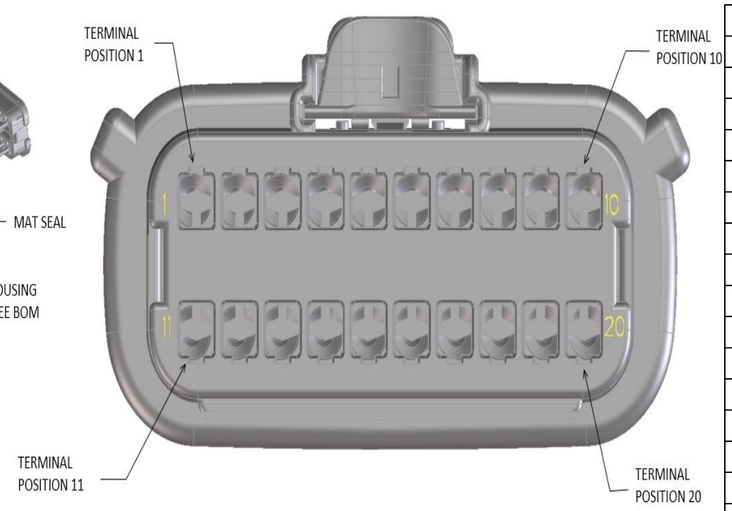

ABBREVIATION	DESCRIPTION	COLOR	MATERIAL
A-BLACK	HOUSING, KEYING OPTION A	BLACK	SPS/NYLON GF20
B-LIGHT GRAY	HOUSING, KEYING OPTION B	LIGHT GRAY	SPS/NYLON GF20
C-BROWN	HOUSING, KEYING OPTION C	BROWN	SPS/NYLON GF20
D-GREEN	HOUSING, KEYING OPTION D	GREEN	SPS/NYLON GF20
C-DARK GRAY	HOUSING, KEYING OPTION C	DARK GRAY	SPS/NYLON GF20
D-STONE GRAY	HOUSING, KEYING OPTION D	STONE GRAY	SPS/NYLON GF20
A-YELLOW	HOUSING, KEYING OPTION A	YELLOW	SPS/NYLON GF20
A-BLACK-CLIP	HOUSING, KEYING OPTION A WITH CLIPSLOT	BLACK	SPS/NYLON GF20
B-LIGHT GRAY-CLIP	HOUSING, KEYING OPTION B WITH CLIPSLOT	LIGHT GRAY	SPS/NYLON GF20
C-DARK GRAY-CLIP	HOUSING, KEYING OPTION C WITH CLIPSLOT	DARK GRAY	SPS/NYLON GF20
D-STONE GRAY-CLIP	HOUSING, KEYING OPTION D WITH CLIPSLOT	STONE GRAY	SPS/NYLON GF20
A-YELLOW-CLIP	HOUSING, KEYING OPTION A WITH CLIPSLOT	YELLOW	SPS/NYLON GF20
B-YELLOW-CLIP	HOUSING, KEYING OPTION B WITH CLIPSLOT	YELLOW	SPS/NYLON GF20
GCP	GROMMET CAP (PLUGGED)	BLACK	SPS/NYLON GF20
GCO	GROMMET CAP (OPEN)	BLACK	SPS/NYLON GF20
PLR	PLR	NATURAL	SPS/NYLON GF20
CPA	CPA	RED	PBT GF30
M	MAT SEAL	LIGHT BLUE	INHERENTLY LUBRICATED SILICONE
R	RING SEAL	GREEN	INHERENTLY LUBRICATED SILICONE

FOR ADDITIONAL INFORMATION SEE SD-33472-0001

ASSEMBLY DESCRIPTION	ASSEMBLY PART NUMBER	COMPONENT						BLOCKED TERMINALS										STATUS	COMMENT	OPTIONAL ATTACHMENTS SOLD SEPARATELY			
		THE PRESENCE OF AN ABBREVIATION INDICATES THE PRESENCE OF THAT COMPONENT						CAVITY WITH A NUMBER INDICATES BLOCKED TERMINAL POSITION CAVITY WITHOUT A NUMBER INDICATES OPEN TERMINAL POSITION															
		HOUSING KEY/COLOR	GROMMET CAP	PLR	CPA	MAT SEAL	RING SEAL													BACKSHELL WITH RIBS	BACKSHELL WITHOUT RIBS	90^0 ADAPTOR WITH RIBS	90^0 ADAPTOR WITHOUT RIBS
KEY B, YELLOW, WITH CLIPSLOT, W/CPA	334720200	B-YELLOW-CLIP	GCO	PLR	CPA	M	R	-	-	-	-	-	-	-	-	-	-	NOT RECOMMENDED		34951-2011	34951-2021	34951-1631	34951-1641
								-	-	-	-	-	-	-	-	-	-						
KEY B, YELLOW, WITH CLIPSLOT, W/CPA	334720201	B--CLIP	GCP	PLR	CPA	M	R	1	-	3	-	5	-	-	-	-	-	SALEABLE		N/A	N/A	N/A	N/A
								-	-	-	14	15	-	-	-	-	-						
MX150 ASSY RCP 2X10 BK A/20	334722001	A-BK	GCO	PLR		M	R	-	-	-	-	-	-	-	-	-	-	SALEABLE		N/A	N/A	N/A	N/A
								-	-	-	-	-	-	-	-	-	-						
MX150 ASSY RCP 2X10 LG B/20	334722002	B-LG	GCO	PLR		M	R	-	-	-	-	-	-	-	-	-	-	SALEABLE		N/A	N/A	N/A	N/A
								-	-	-	-	-	-	-	-	-	-						
MX150 ASSY RCP 2X10 BR C/20	334722003	C-	GCO	PLR		M	R	-	-	-	-	-	-	-	-	-	-	SALEABLE		N/A	N/A	N/A	N/A
								-	-	-	-	-	-	-	-	-	-						
MX150 ASSY RCP 2X10 GR D/20	334722004	D-	GCO	PLR		M	R	-	-	-	-	-	-	-	-	-	-	SALEABLE		N/A	N/A	N/A	N/A
								-	-	-	-	-	-	-	-	-	-						
MX150 ASSY RCP 2X10 CPA BK A/20	334722006	A-BK	GCO	PLR	CPA	M	R	-	-	-	-	-	-	-	-	-	-	SALEABLE		N/A	N/A	N/A	N/A
								-	-	-	-	-	-	-	-	-	-						
MX150 ASSY RCP 2X10 CPA LG B/20	334722007	B-LG	GCO	PLR	CPA	M	R	-	-	-	-	-	-	-	-	-	-	SALEABLE		N/A	N/A	N/A	N/A
								-	-	-	-	-	-	-	-	-	-						
MX150 ASSY RCP 2X10 CPA BR C/20	334722008	C-	GCO	PLR	CPA	M	R	-	-	-	-	-	-	-	-	-	-	SALEABLE		N/A	N/A	N/A	N/A
								-	-	-	-	-	-	-	-	-	-						
MX150 ASSY RCP 2X10 CPA GR D/20	334722009	D-	GCO	PLR	CPA	M	R	-	-	-	-	-	-	-	-	-	-	SALEABLE		N/A	N/A	N/A	N/A
								-	-	-	-	-	-	-	-	-	-						
MX150 ASSY RCP 2X10 CPA BK A/19	334722011	A-BK	GCP	PLR	CPA	M	R	-	-	-	-	-	-	-	-	-	-	SALEABLE		N/A	N/A	N/A	N/A
								-	-	-	-	-	-	-	-	-	20						
MX150 ASSY RCP 2X10 BK A/19	334722012	A-BK	GCP	PLR		M	R	-	-	-	-	-	-	-	-	-	-	SALEABLE		N/A	N/A	N/A	N/A
								11	-	-	-	-	-	-	-	-	-						
MX150 ASSY RCP 2X10 BK A/12	334722013	A-BK	GCP	PLR		M	R	-	-	-	4	5	6	7	-	-	-	SALEABLE		N/A	N/A	N/A	N/A
								-	-	-	14	15	16	17	-	-	-						
MX150 ASSY RCP 2X10 BK A/18	334722014	A-BK	GCP	PLR		M	R	-	-	-	-	-	-	7	-	-	-	SALEABLE		N/A	N/A	N/A	N/A
								-	-	-	-	-	16	-	-	-	-						
MX150 ASSY RCP 2X10 CPA BK A/15	334722015	A-BK	GCP	PLR	CPA	M	R	-	2	-	-	-	-	-	-	9	-	SALEABLE		N/A	N/A	N/A	N/A
								-	12	-	-	15	-	-	-	19	-						

molex

MX150 RECEPTACLE 2X10 SEALED ASSEMBLY MAT SEAL
BOM AND PIN OUT SHEET

ASSEMBLY DESCRIPTION	ASSEMBLY PART NUMBER	COMPONENT						BLOCKED TERMINALS										STATUS	COMMENT	OPTIONAL ATTACHMENTS SOLD SEPARATELY			
		THE PRESENCE OF AN ABBREVIATION INDICATES THE PRESENCE OF THAT COMPONENT						CAVITY WITH A NUMBER INDICATES BLOCKED TERMINAL POSITION CAVITY WITHOUT A NUMBER INDICATES OPEN TERMINAL POSITION															
		HOUSING KEY/COLOR	GROMMET CAP	PLR	CPA	MAT SEAL	RING SEAL													BACKSHELL WITH RIBS	BACKSHELL WITHOUT RIBS	90^0 ADAPTOR WITH RIBS	90^0 ADAPTOR WITHOUT RIBS
MX150 ASSY RCP 2X10 CPA BK A/16	334722016	A-BK	GCP	PLR	CPA	M	R	-	-	3	-	-	-	-	-	9	-	SALEABLE		N/A	N/A	N/A	N/A
								-	-	13	-	-	-	-	-	19	-						
MX150 ASSY RCP 2X10 CPA BK A/15	334722017	A-BK	GCP	PLR	CPA	M	R	-	-	-	-	-	-	-	-	9	-	SALEABLE		N/A	N/A	N/A	N/A
								11	-	13	-	15	16	-	-	-	-						
MX150 ASSY RCP 2X10 CPA BK A/16	334722018	A-BK	GCP	PLR	CPA	M	R	-	-	-	-	-	-	-	-	-	10	SALEABLE		N/A	N/A	N/A	N/A
								11	12	-	-	-	-	-	-	-	20						
MX150 ASSY RCP 2X10 CPA BK A/17	334722019	A-BK	GCP	PLR	CPA	M	R	1	2	-	-	-	-	-	-	-	-	SALEABLE		N/A	N/A	N/A	N/A
								-	-	-	-	-	-	-	-	-	20						
MX150 ASSY RCP 2X10 CPA BK A/14	334722020	A-BK	GCP	PLR	CPA	M	R	1	2	-	-	-	-	-	-	-	10	SALEABLE		N/A	N/A	N/A	N/A
								11	12	-	-	-	-	-	-	-	20						
MX150 ASSY RCP 2X10 CPA BK A/12	334722021	A-BK	GCP	PLR	CPA	M	R	1	2	-	-	-	-	-	-	-	10	SALEABLE		N/A	N/A	N/A	N/A
								11	12	13	14	-	-	-	-	-	20						
MX150 ASSY RCP 2X10 CPA BK A/18	334722022	A-BK	GCP	PLR	CPA	M	R	-	-	-	-	-	-	-	-	-	-	SALEABLE		N/A	N/A	N/A	N/A
								-	-	-	-	-	16	-	18	-	-						
MX150 ASSY RCP 2X10 CPA BK A/17	334722023	A-BK	GCP	PLR	CPA	M	R	-	-	-	-	-	-	-	-	-	-	SALEABLE		N/A	N/A	N/A	N/A
								-	-	-	-	-	-	-	18	19	20						
MX150 ASSY RCP 2X10 CPA BK A/16	334722024	A-BK	GCP	PLR	CPA	M	R	-	2	-	-	-	-	-	-	-	-	SALEABLE		N/A	N/A	N/A	N/A
								-	-	-	-	-	-	-	18	19	20						
MX150 ASSY RCP 2X10 CPA BK A/14	334722025	A-BK	GCP	PLR	CPA	M	R	-	-	3	4	5	-	-	-	-	-	SALEABLE		N/A	N/A	N/A	N/A
								11	-	-	-	-	16	17	-	-	-						
MX150 ASSY RCP 2X10 CPA BK A/15	334722026	A-BK	GCP	PLR	CPA	M	R	-	-	3	4	-	-	-	-	-	10	SALEABLE		N/A	N/A	N/A	N/A
								-	-	-	14	-	-	-	-	19	-						
MX150 ASSY RCP 2X10 CPA BK A/14	334722027	A-BK	GCP	PLR	CPA	M	R	-	-	3	4	5	-	-	-	-	10	SALEABLE		N/A	N/A	N/A	N/A
								-	-	-	14	-	-	-	-	19	-						
MX150 ASSY RCP 2X10 CPA BK A/10	334722028	A-BK	GCP	PLR	CPA	M	R	-	-	3	4	5	-	-	-	-	-	SALEABLE		N/A	N/A	N/A	N/A
								11	-	-	14	-	16	17	18	19	20						
MX150 ASSY RCP 2X10 CPA BK A/12	334722029	A-BK	GCP	PLR	CPA	M	R	-	-	3	4	5	-	-	-	-	-	SALEABLE		N/A	N/A	N/A	N/A
								11	-	-	14	-	16	17	-	19	-						
MX150 ASSY RCP 2X10 CPA BK A/13	334722030	A-BK	GCP	PLR	CPA	M	R	-	-	3	4	5	-	-	-	-	10	SALEABLE		N/A	N/A	N/A	N/A
								-	-	-	14	-	-	17	-	19	-						
MX150 ASSY RCP 2X10 CPA BK A/14	334722031	A-BK	GCP	PLR	CPA	M	R	-	-	3	4	-	-	-	-	-	10	SALEABLE		N/A	N/A	N/A	N/A
								-	-	-	14	-	-	17	-	19	-						
MX150 ASSY RCP 2X10 CPA BK A/15	334722032	A-BK	GCP	PLR	CPA	M	R	-	-	-	-	-	-	-	-	-	10	SALEABLE		N/A	N/A	N/A	N/A
								-	12	13	14	-	-	-	-	19	-						
MX150 ASSY RCP 2X10 CPA BK A/13	334722033	A-BK	GCP	PLR	CPA	M	R	-	-	3	4	-	-	-	-	-	-	SALEABLE		N/A	N/A	N/A	N/A
								11	-	-	14	-	16	17	-	19	-						
MX150 ASSY RCP 2X10 CPA BK A/19	334722034	A-BK	GCP	PLR	CPA	M	R	-	-	-	-	-	-	-	-	-	-	SALEABLE		N/A	N/A	N/A	N/A
								11	-	-	-	-	-	-	-	-	-						
MX150 ASSY RCP 2X10 CPA BK A/11	334722035	A-BK	GCP	PLR	CPA	M	R	1	2	-	-	-	-	-	-	-	10	SALEABLE		N/A	N/A	N/A	N/A
								11	12	13	14	15	-	-	-	-	20						
MX150 ASSY RCP 2X10 CPA BK A/13	334722036	A-BK	GCP	PLR	CPA	M	R	1	2	-	-	-	-	-	-	-	10	SALEABLE		N/A	N/A	N/A	N/A
								11	12	-	-	15	-	-	-	-	20						
MX150 ASSY RCP 2X10 CPA BK A/13	334722037	A-BK	GCP	PLR	CPA	M	R	-	-	-	-	-	-	-	-	-	10	SALEABLE		N/A	N/A	N/A	N/A
								11	12	13	14	15	-	-	-	-	20						
MX150 ASSY RCP 2X10 CPA BK A/14	334722038	A-BK	GCP	PLR	CPA	M	R	-	-	-	-	-	-	-	-	-	10	SALEABLE		N/A	N/A	N/A	N/A
								11	12	13	14	-	-	-	-	-	20						
MX150 ASSY RCP 2X10 CPA BK A/15	334722039	A-BK	GCP	PLR	CPA	M	R	-	-	-	-	-	-	-	-	-	10	SALEABLE		N/A	N/A	N/A	N/A
								11	12	-	-	15	-	-	-	-	20						
MX150 ASSY RCP 2X10 CPA BK A/12	334722040	A-BK	GCP	PLR	CPA	M	R	-	-	3	-	-	-	-	-	-	10	SALEABLE		N/A	N/A	N/A	N/A
								11	12	-	-	15	16	17	-	-	20						
MX150 ASSY RCP 2X10 CPA BK A/10	334722041	A-BK	GCP	PLR	CPA	M	R	-	-	3	4	5	-	-	-	-	10	SALEABLE		N/A	N/A	N/A	N/A
								11	12	-	-	15	16	17	-	-	20						
MX150 ASSY RCP 2X10 CPA BK A/15	334722042	A-BK	GCP	PLR	CPA	M	R	-	-	3	-	-	-	-	-	-	-	SALEABLE		N/A	N/A	N/A	N/A
								-	-	-	-	15	16	17	-	-	20						

molex

MX150 RECEPTACLE 2X10 SEALED ASSEMBLY MAT SEAL
BOM AND PIN OUT SHEET

ASSEMBLY DESCRIPTION	ASSEMBLY PART NUMBER	COMPONENT						BLOCKED TERMINALS										STATUS	COMMENT	OPTIONAL ATTACHMENTS SOLD SEPARATELY			
		THE PRESENCE OF AN ABBREVIATION INDICATES THE PRESENCE OF THAT COMPONENT						CAVITY WITH A NUMBER INDICATES BLOCKED TERMINAL POSITION CAVITY WITHOUT A NUMBER INDICATES OPEN TERMINAL POSITION															
		HOUSING KEY/COLOR	GROMMET CAP	PLR	CPA	MAT SEAL	RING SEAL													BACKSHELL WITH RIBS	BACKSHELL WITHOUT RIBS	90^0 ADAPTOR WITH RIBS	90^0 ADAPTOR WITHOUT RIBS
MX150 ASSY RCP 2X10 CPA BK A/11	334722043	A-BK	GCP	PLR	CPA	M	R	1	2	3	4	5	-	-	-	-	-	SALEABLE		N/A	N/A	N/A	N/A
								-	-	-	-	15	16	17	-	-	20						
MX150 ASSY RCP 2X10 CPA BK A/14	334722044	A-BK	GCP	PLR	CPA	M	R	1	2	3	4	5	-	-	-	-	-	SALEABLE		N/A	N/A	N/A	N/A
								-	-	-	-	-	-	-	-	-	20						
MX150 ASSY RCP 2X10 CPA BK A/12	334722045	A-BK	GCP	PLR	CPA	M	R	1	2	3	4	5	-	-	-	-	-	SALEABLE		N/A	N/A	N/A	N/A
								-	-	13	14	-	-	-	-	-	20						
MX150 ASSY RCP 2X10 CPA BK A/9	334722046	A-BK	GCP	PLR	CPA	M	R	1	2	3	4	5	-	-	-	-	-	SALEABLE		N/A	N/A	N/A	N/A
								-	-	13	14	15	16	17	-	-	20						
MX150 ASSY RCP 2X10 CPA BK A/13	334722047	A-BK	GCP	PLR	CPA	M	R	-	-	3	4	5	-	-	-	-	-	SALEABLE		N/A	N/A	N/A	N/A
								-	-	-	-	15	16	17	-	-	20						
MX150 ASSY RCP 2X10 CPA BK A/16	334722048	A-BK	GCP	PLR	CPA	M	R	-	-	3	4	5	-	-	-	-	-	SALEABLE		N/A	N/A	N/A	N/A
								-	-	-	-	-	-	-	-	-	20						
MX150 ASSY RCP 2X10 CPA BK A/14	334722049	A-BK	GCP	PLR	CPA	M	R	-	-	3	4	5	-	-	-	-	-	SALEABLE		N/A	N/A	N/A	N/A
								-	-	13	14	-	-	-	-	-	20						
MX150 ASSY RCP 2X10 CPA BK A/11	334722050	A-BK	GCP	PLR	CPA	M	R	-	-	3	4	5	-	-	-	-	-	SALEABLE		N/A	N/A	N/A	N/A
								-	-	13	14	15	16	17	-	-	20						
MX150 ASSY RCP 2X10 CPA BK A/11	334722051	A-BK	GCP	PLR	CPA	M	R	1	2	3	-	-	-	-	-	-	-	SALEABLE		N/A	N/A	N/A	N/A
								-	-	13	14	15	16	17	-	-	20						
MX150 ASSY RCP 2X10 CPA BK A/14	334722052	A-BK	GCP	PLR	CPA	M	R	1	2	3	-	-	-	-	-	-	-	SALEABLE		N/A	N/A	N/A	N/A
								-	-	13	14	-	-	-	-	-	20						
MX150 ASSY RCP 2X10 CPA BK A/13	334722053	A-BK	GCP	PLR	CPA	M	R	1	2	3	-	-	-	-	-	-	-	SALEABLE		N/A	N/A	N/A	N/A
								-	-	-	-	15	16	17	-	-	20						
MX150 ASSY RCP 2X10 CPA BK A/16	334722054	A-BK	GCP	PLR	CPA	M	R	1	2	3	-	-	-	-	-	-	-	SALEABLE		N/A	N/A	N/A	N/A
								-	-	-	-	-	-	-	-	-	20						
MX150 ASSY RCP 2X10 CPA BK A/16	334722055	A-BK	GCP	PLR	CPA	M	R	-	-	3	-	-	-	-	-	-	-	SALEABLE		N/A	N/A	N/A	N/A
								-	-	13	14	-	-	-	-	-	20						
MX150 ASSY RCP 2X10 CPA BK A/18	334722056	A-BK	GCP	PLR	CPA	M	R	-	-	3	-	-	-	-	-	-	-	SALEABLE		N/A	N/A	N/A	N/A
								-	-	-	-	-	-	-	-	-	20						
MX150 ASSY RCP 2X10 BK A/14	334722057	A-BK	GCP	PLR		M	R	-	-	3	4	-	-	-	-	-	10	SALEABLE		N/A	N/A	N/A	N/A
								-	-	-	14	-	-	17	-	19	-						
MX150 ASSY RCP 2X10 CPA BK A/16	334722058	A-BK	GCP	PLR	CPA	M	R	-	-	-	-	-	-	-	-	-	-	SALEABLE		N/A	N/A	N/A	N/A
								-	-	13	14	15	-	-	-	-	20						
MX150 ASSY RCP 2X10 BK A/16	334722059	A-BK	GCP	PLR		M	R	-	-	-	-	-	-	-	-	-	10	SALEABLE		N/A	N/A	N/A	N/A
								-	-	-	14	-	-	17	-	19	-						
MX150 ASSY RCP 2X10 DG C/20	334722060	C-DG	GCO	PLR		M	R	-	-	-	-	-	-	-	-	-	-	SALEABLE		N/A	N/A	N/A	N/A
								-	-	-	-	-	-	-	-	-	-						
MX150 ASSY RCP 2X10 SG D/20	334722061	D-SG	GCO	PLR		M	R	-	-	-	-	-	-	-	-	-	-	SALEABLE		N/A	N/A	N/A	N/A
								-	-	-	-	-	-	-	-	-	-						
MX150 ASSY RCP 2X10 CPA DG C/20	334722062	C-DG	GCO	PLR	CPA	M	R	-	-	-	-	-	-	-	-	-	-	SALEABLE		N/A	N/A	N/A	N/A
								-	-	-	-	-	-	-	-	-	-						
MX150 ASSY RCP 2X10 CPA SG D/20	334722063	D-SG	GCO	PLR	CPA	M	R	-	-	-	-	-	-	-	-	-	-	SALEABLE		N/A	N/A	N/A	N/A
								-	-	-	-	-	-	-	-	-	-						
MX150 ASSY RCP 2X10 BK A/15	334722064	A-BK	GCP	PLR		M	R	-	-	-	-	-	-	-	-	-	10	SALEABLE		N/A	N/A	N/A	N/A
								-	-	-	14	-	-	17	18	19	-						
MX150 ASSY RCP 2X10 BK A/13	334722065	A-BK	GCP	PLR		M	R	-	-	3	-	-	-	-	-	-	10	SALEABLE		N/A	N/A	N/A	N/A
								-	-	13	14	-	-	17	18	19	-						
MX150 ASSY RCP 2X10 BK A/12	334722066	A-BK	GCP	PLR		M	R	-	-	3	-	-	-	-	-	-	10	SALEABLE		N/A	N/A	N/A	N/A
								-	-	13	14	-	-	17	18	19	20						
MX150 ASSY RCP 2X10 BK A/13	334722067	A-BK	GCP	PLR		M	R	-	-	-	4	5	-	-	-	-	10	SALEABLE		N/A	N/A	N/A	N/A
								-	-	-	14	15	-	17	-	19	-						
MX150 ASSY RCP 2X10 BK A/12	334722068	A-BK	GCP	PLR		M	R	-	-	-	4	5	-	-	-	-	10	SALEABLE		N/A	N/A	N/A	N/A
								-	-	-	14	15	-	17	18	19	-						
MX150 ASSY RCP 2X10 BK A/11	334722069	A-BK	GCP	PLR		M	R	-	-	-	4	5	-	-	-	-	10	SALEABLE		N/A	N/A	N/A	N/A
								-	-	-	14	15	-	17	18	19	20						

molex

MX150 RECEPTACLE 2X10 SEALED ASSEMBLY MAT SEAL
BOM AND PIN OUT SHEET

ASSEMBLY DESCRIPTION	ASSEMBLY PART NUMBER	COMPONENT						BLOCKED TERMINALS										STATUS	COMMENT	OPTIONAL ATTACHMENTS SOLD SEPARATELY			
		THE PRESENCE OF AN ABBREVIATION INDICATES THE PRESENCE OF THAT COMPONENT						CAVITY WITH A NUMBER INDICATES BLOCKED TERMINAL POSITION CAVITY WITHOUT A NUMBER INDICATES OPEN TERMINAL POSITION															
		HOUSING KEY/COLOR	GROMMET CAP	PLR	CPA	MAT SEAL	RING SEAL													BACKSHELL WITH RIBS	BACKSHELL WITHOUT RIBS	90^0 ADAPTOR WITH RIBS	90^0 ADAPTOR WITHOUT RIBS
MX150 ASSY RCP 2X10 BK A/10	334722070	A-BK	GCP	PLR		M	R	-	-	3	-	-	6	7	-	-	10	SALEABLE		N/A	N/A	N/A	N/A
								-	-	13	14	-	-	17	18	19	20						
MX150 ASSY RCP 2X10 BK A/17	334722071	A-BK	GCP	PLR		M	R	-	-	-	4	-	-	7	-	-	-	SALEABLE		N/A	N/A	N/A	N/A
								-	-	-	-	-	16	-	-	-	-						
MX150 ASSY RCP 2X10 BK A/8	334722072	A-BK	GCP	PLR		M	R	-	2	3	4	5	6	7	-	-	-	SALEABLE		N/A	N/A	N/A	N/A
								-	12	13	14	15	16	17	-	-	-						
MX150 ASSY RCP 2X10 BK A/13	334722073	A-BK	GCP	PLR		M	R	-	-	3	4	5	-	-	-	-	-	SALEABLE		N/A	N/A	N/A	N/A
								-	-	13	-	15	-	-	18	19	-						
MX150 ASSY RCP 2X10 BK A/14	334722074	A-BK	GCP	PLR		M	R	-	-	-	4	5	6	7	-	-	-	SALEABLE		N/A	N/A	N/A	N/A
								-	-	-	-	-	16	17	-	-	-						
MX150 ASSY RCP 2X10 BK A/8	334722075	A-BK	GCP	PLR		M	R	1	2	3	4	5	6	-	8	-	10	SALEABLE		N/A	N/A	N/A	N/A
								-	-	-	-	-	-	17	18	19	20						
MX150 ASSY RCP 2X10 BK A/16	334722076	A-BK	GCP	PLR		M	R	-	-	-	-	-	-	-	-	-	-	SALEABLE		N/A	N/A	N/A	N/A
								-	-	-	-	-	-	17	18	19	20						
MX150 ASSY RCP 2X10 BK A/5	334722077	A-BK	GCP	PLR		M	R	1	2	3	4	5	6	7	8	9	10	SALEABLE		N/A	N/A	N/A	N/A
								-	-	-	-	-	16	17	18	19	20						
MX150 ASSY RCP 2X10 BK A/7	334722078	A-BK	GCP	PLR		M	R	1	2	3	4	5	6	-	8	-	10	SALEABLE		N/A	N/A	N/A	N/A
								-	-	-	-	-	16	17	18	19	20						
MX150 ASSY RCP 2X10 BK A/13	334722079	A-BK	GCP	PLR		M	R	-	2	-	-	-	-	-	8	-	-	SALEABLE		N/A	N/A	N/A	N/A
								-	-	-	-	-	16	17	18	19	20						
MX150 ASSY RCP 2X10 BK A/15	334722080	A-BK	GCP	PLR		M	R	-	-	-	-	-	-	-	-	-	-	SALEABLE		N/A	N/A	N/A	N/A
								-	-	-	-	-	16	17	18	19	20						
MX150 ASSY RCP 2X10 BK A/6	334722081	A-BK	GCP	PLR		M	R	1	2	3	4	5	6	7	8	9	10	SALEABLE		N/A	N/A	N/A	N/A
								-	-	-	-	-	-	17	18	19	20						
MX150 ASSY RCP 2X10 BK A/14	334722082	A-BK	GCP	PLR		M	R	-	-	-	-	-	-	7	-	9	-	SALEABLE		N/A	N/A	N/A	N/A
								-	-	-	-	-	-	17	18	19	20						
MX150 ASSY RCP 2X10 BK A/17	334722083	A-BK	GCP	PLR		M	R	-	-	-	-	-	-	-	-	-	10	SALEABLE		N/A	N/A	N/A	N/A
								-	-	-	-	-	-	17	-	19	-						
MX150 ASSY RCP 2X10 BK A/9	334722084	A-BK	GCP	PLR		M	R	1	2	3	4	5	6	7	8	-	10	SALEABLE		N/A	N/A	N/A	N/A
								-	-	-	-	-	-	17	-	19	-						
MX150 ASSY RCP 2X10 BK A/7	334722085	A-BK	GCP	PLR		M	R	1	2	3	4	5	6	7	8	9	10	SALEABLE		N/A	N/A	N/A	N/A
								-	12	-	-	-	-	17	-	19	-						
MX150 ASSY RCP 2X10 BK A/4	334722086	A-BK	GCP	PLR		M	R	1	2	3	4	5	6	7	8	9	10	SALEABLE		N/A	N/A	N/A	N/A
								-	-	-	14	15	-	17	18	19	20						
MX150 ASSY RCP 2X10 BK A/12	334722087	A-BK	GCP	PLR		M	R	-	-	-	-	-	-	7	-	9	-	SALEABLE		N/A	N/A	N/A	N/A
								-	-	-	14	15	-	17	18	19	20						
MX150 ASSY RCP 2X10 BK A/17	334722088	A-BK	GCP	PLR		M	R	-	-	-	-	-	-	7	-	-	-	SALEABLE		N/A	N/A	N/A	N/A
								-	-	-	-	-	-	17	-	-	20						
MX150 ASSY RCP 2X10 CPA YW A/20	334722089	A-YW	GCO	PLR	CPA	M	R	-	-	-	-	-	-	-	-	-	-	SALEABLE		N/A	N/A	N/A	N/A
								-	-	-	-	-	-	-	-	-	-						
MX150 ASSY RCP 2X10 BK A/19	334722090	A-BK	GCP	PLR		M	R	-	-	-	-	-	-	-	-	-	-	SALEABLE		N/A	N/A	N/A	N/A
								-	-	-	-	-	-	-	-	-	20						
MX150 ASSY RCP 2X10 BK A/17	334722091	A-BK	GCP	PLR		M	R	-	2	-	-	-	-	-	-	-	-	SALEABLE		N/A	N/A	N/A	N/A
								-	-	-	-	15	16	-	-	-	-						
MX150 ASSY RCP 2X10 CPA BK A/18	334722092	A-BK	GCP	PLR	CPA	M	R	-	-	-	-	-	-	7	-	-	-	SALEABLE		N/A	N/A	N/A	N/A
								-	-	-	-	-	16	-	-	-	-						
MX150 ASSY RCP 2X10 YW A/20	334722093	A-YW	GCO	PLR		M	R	-	-	-	-	-	-	-	-	-	-	SALEABLE		N/A	N/A	N/A	N/A
								-	-	-	-	-	-	-	-	-	-						
MX150 ASSY RCP 2X10 BK A/9	334722094	A-BK	GCP	PLR		M	R	-	-	-	4	-	-	-	-	-	10	SALEABLE		N/A	N/A	N/A	N/A
								11	12	13	14	15	16	-	18	19	20						
MX150 ASSY RCP 2X10 CPA BK A/18	334722095	A-BK	GCP	PLR	CPA	M	R	-	-	-	-	-	-	-	-	-	-	SALEABLE		N/A	N/A	N/A	N/A
								-	-	-	-	-	-	-	18	19	-						
MX150 ASSY RCP 2X10 CPA BK A/15	334722096	A-BK	GCP	PLR	CPA	M	R	-	2	-	4	-	-	-	-	-	-	SALEABLE		N/A	N/A	N/A	N/A
								11	12	-	14	-	-	-	-	-	-						

molex

MX150 RECEPTACLE 2X10 SEALED ASSEMBLY MAT SEAL
BOM AND PIN OUT SHEET

ASSEMBLY DESCRIPTION	ASSEMBLY PART NUMBER	COMPONENT THE PRESENCE OF AN ABBREVIATION INDICATES THE PRESENCE OF THAT COMPONENT						BLOCKED TERMINALS CAVITY WITH A NUMBER INDICATES BLOCKED TERMINAL POSITION CAVITY WITHOUT A NUMBER INDICATES OPEN TERMINAL POSITION										STATUS	COMMENT	OPTIONAL ATTACHMENTS SOLD SEPARATELY			
		HOUSING KEY/COLOR	GROMMET CAP	PLR	CPA	MAT SEAL	RING SEAL													BACKSHELL WITH RIBS	BACKSHELL WITHOUT RIBS	90^0 ADAPTOR WITH RIBS	90^0 ADAPTOR WITHOUT RIBS
MX150 ASSY RCP 2X10 CPA BK A/18	334722097	A-BK	GCP	PLR	CPA	M	R	-	-	-	-	-	-	-	-	9	10	SALEABLE		N/A	N/A	N/A	N/A
								-	-	-	-	-	-	-	-	-	-						
MX150 ASSY RCP 2X10 CPA BK A/12	334722098	A-BK	GCP	PLR	CPA	M	R	1	-	-	-	-	-	-	-	-	-	SALEABLE		N/A	N/A	N/A	N/A
								-	12	-	-	15	16	17	18	19	20						
MX150 ASSY RCP 2X10 CPA BK A/2	334722099	A-BK	GCP	PLR	CPA	M	R	1	2	3	4	5	6	7	8	9	-	SALEABLE		N/A	N/A	N/A	N/A
								11	12	13	14	15	16	-	18	19	20						
MX150 ASSY RCP 2X10 CPA BK A/11	334722100	A-BK	GCP	PLR	CPA	M	R	-	-	3	4	5	6	-	8	9	-	SALEABLE		N/A	N/A	N/A	N/A
								-	-	-	-	-	-	-	18	19	20						
MX150 ASSY RCP 2X10 CPA BK A/4	334722101	A-BK	GCP	PLR	CPA	M	R	1	2	3	4	5	6	-	-	-	-	SALEABLE		N/A	N/A	N/A	N/A
								11	12	13	14	15	16	17	18	19	20						
MX150 ASSY RCP 2X10 BK A/14	334722102	A-BK	GCP	PLR		M	R	-	-	-	-	-	-	-	-	-	10	SALEABLE		N/A	N/A	N/A	N/A
								-	-	-	14	-	-	17	18	19	20						
MX150 ASSY RCP 2X10 CPA BK A/11	334722103	A-BK	GCP	PLR	CPA	M	R	-	-	3	4	5	6	-	8	9	10	SALEABLE		N/A	N/A	N/A	N/A
								-	-	-	14	-	-	-	-	19	-						
MX150 ASSY RCP 2X10 CPA BK A/14	334722104	A-BK	GCP	PLR	CPA	M	R	-	-	3	-	-	-	-	8	9	-	SALEABLE		N/A	N/A	N/A	N/A
								-	-	-	-	-	-	-	18	19	20						
MX150 ASSY RCP 2X10 BK A/13	334722105	A-BK	GCP	PLR		M	R	-	-	-	-	-	-	-	-	9	-	SALEABLE		N/A	N/A	N/A	N/A
								-	-	13	14	-	-	17	18	19	20						
MX150 ASSY RCP 2X10 LG B/16	334722106	B-LG	GCP	PLR		M	R	-	-	-	-	-	6	7	8	-	-	SALEABLE		N/A	N/A	N/A	N/A
								-	-	-	-	-	16	-	-	-	-						
MX150 ASSY RCP 2X10 LG B/18	334722107	B-LG	GCP	PLR		M	R	-	-	-	-	-	-	-	8	-	-	SALEABLE		N/A	N/A	N/A	N/A
								-	-	-	-	-	16	-	-	-	-						
MX150 ASSY RCP 2X10 LG B/16	334722108	B-LG	GCP	PLR		M	R	-	-	-	-	-	6	7	-	9	10	SALEABLE		N/A	N/A	N/A	N/A
								-	-	-	-	-	-	-	-	-	-						
MX150 ASSY RCP 2X10 LG B/14	334722109	B-LG	GCP	PLR		M	R	-	-	3	-	5	6	7	-	9	10	SALEABLE		N/A	N/A	N/A	N/A
								-	-	-	-	-	-	-	-	-	-						
MX150 ASSY RCP 2X10 LG B/16	334722110	B-LG	GCP	PLR		M	R	-	-	3	-	5	-	-	-	9	10	SALEABLE		N/A	N/A	N/A	N/A
								-	-	-	-	-	-	-	-	-	-						
MX150 ASSY RCP 2X10 LG B/15	334722111	B-LG	GCP	PLR		M	R	-	-	3	4	5	-	-	-	9	10	SALEABLE		N/A	N/A	N/A	N/A
								-	-	-	-	-	-	-	-	-	-						
MX150 ASSY RCP 2X10 LG B/10	334722112	B-LG	GCP	PLR		M	R	-	-	3	4	5	-	-	-	9	10	SALEABLE		N/A	N/A	N/A	N/A
								-	-	-	-	15	-	17	18	19	20						
MX150 ASSY RCP 2X10 LG B/8	334722113	B-LG	GCP	PLR		M	R	-	-	3	4	5	6	7	-	9	10	SALEABLE		N/A	N/A	N/A	N/A
								-	-	-	-	15	-	17	18	19	20						
MX150 ASSY RCP 2X10 CPA LG B/11	334722114	B-LG	GCP	PLR	CPA	M	R	-	-	3	4	5	6	-	8	9	10	SALEABLE		N/A	N/A	N/A	N/A
								-	-	-	14	-	-	-	-	19	-						
MX150 ASSY RCP 2X10 CPA YW A/9	334722115	A-YW	GCP	PLR	CPA	M	R	-	-	3	-	-	6	7	8	9	10	SALEABLE		N/A	N/A	N/A	N/A
								11	12	13	14	-	-	-	18	-	-						
MX150 ASSY RCP 2X10 CPA YW A/11	334722116	A-YW	GCP	PLR	CPA	M	R	-	-	3	-	-	6	7	8	9	10	SALEABLE		N/A	N/A	N/A	N/A
								-	12	13	14	-	-	-	-	-	-						
MX150 ASSY RCP 2X10 CPA YW A/15	334722117	A-YW	GCP	PLR	CPA	M	R	-	-	3	-	-	-	7	-	-	10	SALEABLE		N/A	N/A	N/A	N/A
								-	-	-	14	15	-	-	-	-	-						
MX150 ASSY RCP 2X10 CPA YW A/2	334722118	A-YW	GCP	PLR	CPA	M	R	-	-	3	4	5	6	7	8	9	10	SALEABLE		N/A	N/A	N/A	N/A
								11	12	13	14	15	16	17	18	19	20						
MX150 ASSY RCP 2X10 CPA YW A/7	334722119	A-YW	GCP	PLR	CPA	M	R	-	-	3	4	5	6	7	8	9	10	SALEABLE		N/A	N/A	N/A	N/A
								11	12	13	14	-	-	-	18	-	-						
MX150 ASSY RCP 2X10 CPA YW A/14	334722120	A-YW	GCP	PLR	CPA	M	R	-	-	3	-	-	-	7	8	9	10	SALEABLE		N/A	N/A	N/A	N/A
								-	-	-	14	-	-	-	-	-	-						
MX150 ASSY RCP 2X10 CPA BK A/10	334722121	A-BK	GCP	PLR	CPA	M	R	-	-	-	-	-	-	-	-	-	-	SALEABLE		N/A	N/A	N/A	N/A
								11	12	13	14	15	16	17	18	19	20						
MX150 ASSY RCP 2X10 CPA BK A/11	334722122	A-BK	GCP	PLR	CPA	M	R	-	2	3	4	5	-	-	-	-	-	SALEABLE		N/A	N/A	N/A	N/A
								-	-	-	14	-	-	17	18	19	20						
MX150 ASSY RCP 2X10 BK A/18	334722123	A-BK	GCP	PLR		M	R	-	-	-	-	-	-	-	8	-	-	SALEABLE		N/A	N/A	N/A	N/A
								-	-	-	-	15	-	-	-	-	-						

molex

MX150 RECEPTACLE 2X10 SEALED ASSEMBLY MAT SEAL
BOM AND PIN OUT SHEET

ASSEMBLY DESCRIPTION	ASSEMBLY PART NUMBER	COMPONENT THE PRESENCE OF AN ABBREVIATION INDICATES THE PRESENCE OF THAT COMPONENT						BLOCKED TERMINALS CAVITY WITH A NUMBER INDICATES BLOCKED TERMINAL POSITION CAVITY WITHOUT A NUMBER INDICATES OPEN TERMINAL POSITION										STATUS	COMMENT	OPTIONAL ATTACHMENTS SOLD SEPARATELY			
		HOUSING KEY/COLOR	GROMMET CAP	PLR	CPA	MAT SEAL	RING SEAL													BACKSHELL WITH RIBS	BACKSHELL WITHOUT RIBS	90^0 ADAPTOR WITH RIBS	90^0 ADAPTOR WITHOUT RIBS
MX150 ASSY RCP 2X10 BK A/17	334722124	A-BK	GCP	PLR		M	R	-	-	-	-	-	-	-	-	-	-	SALEABLE		N/A	N/A	N/A	N/A
								11	-	-	-	-	-	17	-	19	-						
MX150 ASSY RCP 2X10 BK A/9	334722125	A-BK	GCP	PLR		M	R	1	2	3	4	5	6	7	8	-	-	SALEABLE		N/A	N/A	N/A	N/A
								11	-	-	-	-	-	17	-	19	-						
MX150 ASSY RCP 2X10 CPA BK A/14	334722126	A-BK	GCP	PLR	CPA	M	R	1	-	-	-	-	-	-	8	9	-	SALEABLE		N/A	N/A	N/A	N/A
								11	-	-	-	-	-	-	-	19	20						
MX150 ASSY RCP 2X10 CPA BK A/15	334722127	A-BK	GCP	PLR	CPA	M	R	1	-	-	-	-	-	-	8	-	10	SALEABLE		N/A	N/A	N/A	N/A
								-	-	-	-	15	-	17	-	-	-						
MX150 ASSY RCP 2X10 BK A/15	334722128	A-BK	GCP	PLR		M	R	1	-	-	-	-	-	-	8	-	10	SALEABLE		N/A	N/A	N/A	N/A
								-	-	-	-	15	-	17	-	-	-						
MX150 ASSY RCP 2X10 BK A/14	334722129	A-BK	GCP	PLR		M	R	1	-	-	-	-	-	-	8	9	-	SALEABLE		N/A	N/A	N/A	N/A
								11	-	-	-	-	-	-	-	19	20						
MX150 ASSY RCP 2X10 CPA BK A/13	334722130	A-BK	GCP	PLR	CPA	M	R	1	-	-	-	-	-	-	8	-	10	SALEABLE		N/A	N/A	N/A	N/A
								-	-	13	14	15	-	17	-	-	-						
MX150 ASSY RCP 2X10 BK A/18	334722131	A-BK	GCP	PLR		M	R	-	-	-	4	-	-	-	-	-	-	SALEABLE		N/A	N/A	N/A	N/A
								-	-	-	14	-	-	-	-	-	-						
MX150 ASSY RCP 2X10 BK A/6	334722132	A-BK	GCP	PLR		M	R	-	-	-	4	5	6	7	8	9	10	SALEABLE		N/A	N/A	N/A	N/A
								-	-	-	14	15	16	17	18	19	20						
MX150 ASSY RCP 2X10 BK A/0	334722133	A-BK	GCP	PLR		M	R	1	2	3	4	5	6	7	8	9	10	SALEABLE		N/A	N/A	N/A	N/A
								11	12	13	14	15	16	17	18	19	20						
MX150 ASSY RCP 2X10 BK A/17	334722134	A-BK	GCP	PLR		M	R	1	-	-	-	-	-	-	-	9	-	SALEABLE		N/A	N/A	N/A	N/A
								-	12	-	-	-	-	-	-	-	-						
MX150 ASSY RCP 2X10 BK A/18	334722135	A-BK	GCP	PLR		M	R	1	-	-	-	-	-	-	-	-	-	SALEABLE		N/A	N/A	N/A	N/A
								-	-	-	-	-	-	-	-	19	-						
MX150 ASSY RCP 2X10 BK A/2	334722136	A-BK	GCP	PLR		M	R	1	2	3	4	5	6	7	8	9	10	SALEABLE		N/A	N/A	N/A	N/A
								11	12	13	14	15	16	-	-	19	20						
MX150 ASSY RCP 2X10 BK A/16	334722137	A-BK	GCP	PLR		M	R	1	-	-	-	-	-	-	-	-	-	SALEABLE		N/A	N/A	N/A	N/A
								-	12	13	-	-	-	-	-	19	-						
MX150 ASSY RCP 2X10 CPA BK A/12	334722138	A-BK	GCP	PLR	CPA	M	R	-	-	-	-	-	-	-	-	9	10	SALEABLE		N/A	N/A	N/A	N/A
								-	12	13	14	15	16	17	-	-	-						
MX150 ASSY RCP 2X10 BK A/8	334722139	A-BK	GCP	PLR		M	R	1	2	3	4	5	6	-	8	-	10	SALEABLE		N/A	N/A	N/A	N/A
								-	-	13	-	-	16	-	-	19	20						
MX150 ASSY RCP 2X10 BK A/14	334722140	A-BK	GCP	PLR		M	R	-	2	-	-	-	-	-	8	-	-	SALEABLE		N/A	N/A	N/A	N/A
								-	-	13	-	-	16	-	-	19	20						
MX150 ASSY RCP 2X10 BK A/16	334722141	A-BK	GCP	PLR		M	R	-	-	-	-	-	-	-	-	-	-	SALEABLE		N/A	N/A	N/A	N/A
								-	-	13	-	-	16	-	-	19	20						
MX150 ASSY RCP 2X10 LG B/9	334722142	B-LG	GCP	PLR		M	R	1	2	3	4	5	6	7	8	-	-	SALEABLE		N/A	N/A	N/A	N/A
								11	-	-	-	-	-	17	-	19	-						
MX150 ASSY RCP 2X10 LG B/17	334722143	B-LG	GCP	PLR		M	R	-	-	-	-	-	-	-	-	-	-	SALEABLE		N/A	N/A	N/A	N/A
								11	-	-	-	-	-	17	-	19	-						
MX150 ASSY RCP 2X10 BK A/11	334722144	A-BK	GCP	PLR		M	R	1	2	3	4	5	-	7	8	-	-	SALEABLE		N/A	N/A	N/A	N/A
								-	-	-	-	-	16	-	-	19	-						
MX150 ASSY RCP 2X10 BK A/13	334722145	A-BK	GCP	PLR		M	R	1	2	3	-	-	-	7	-	-	10	SALEABLE		N/A	N/A	N/A	N/A
								-	-	-	-	-	16	-	-	19	-						
MX150 ASSY RCP 2X10 CPA BK A/17	334722146	A-BK	GCP	PLR	CPA	M	R	1	-	-	-	-	-	-	-	9	-	SALEABLE		N/A	N/A	N/A	N/A
								-	12	-	-	-	-	-	-	-	-						
MX150 ASSY RCP 2X10 BK A/7	334722147	A-BK	GCP	PLR		M	R	1	2	3	4	5	-	7	8	-	-	SALEABLE		N/A	N/A	N/A	N/A
								-	-	13	14	15	16	-	-	19	20						
MX150 ASSY RCP 2X10 BK A/9	334722148	A-BK	GCP	PLR		M	R	1	2	3	-	-	-	7	-	-	10	SALEABLE		N/A	N/A	N/A	N/A
								-	-	13	14	15	16	-	-	19	20						
MX150 ASSY RCP 2X10 CPA BK A/17	334722149	A-BK	GCP	PLR	CPA	M	R	-	-	-	-	-	-	-	-	-	10	SALEABLE		N/A	N/A	N/A	N/A
								-	-	-	-	-	-	-	-	19	20						
MX150 ASSY RCP 2X10 CPA BK A/16	334722150	A-BK	GCP	PLR	CPA	M	R	-	-	-	-	-	-	7	-	9	10	SALEABLE		N/A	N/A	N/A	N/A
								-	-	-	-	-	16	-	-	-	-						

molex

MX150 RECEPTACLE 2X10 SEALED ASSEMBLY MAT SEAL
BOM AND PIN OUT SHEET

ASSEMBLY DESCRIPTION	ASSEMBLY PART NUMBER	COMPONENT: THE PRESENCE OF AN ABBREVIATION INDICATES THE PRESENCE OF THAT COMPONENT						BLOCKED TERMINALS: CAVITY WITH A NUMBER INDICATES BLOCKED TERMINAL POSITION; CAVITY WITHOUT A NUMBER INDICATES OPEN TERMINAL POSITION										STATUS	COMMENT	OPTIONAL ATTACHMENTS SOLD SEPARATELY			
		HOUSING KEY/COLOR	GROMMET CAP	PLR	CPA	MAT SEAL	RING SEAL	1	2	3	4	-	-	-	-	9	10			BACKSHELL WITH RIBS	BACKSHELL WITHOUT RIBS	90^0 ADAPTOR WITH RIBS	90^0 ADAPTOR WITHOUT RIBS
								-	-	13	14	-	-	17	18	19	20						
MX150 ASSY RCP 2X10 CPA BK A/8	334722151	A-BK	GCP	PLR	CPA	M	R	1	2	3	4	5	-	7	8	9	-	SALEABLE		N/A	N/A	N/A	N/A
								-	-	-	-	-	16	17	18	19	20						
MX150 ASSY RCP 2X10 BK A/7	334722152	A-BK	GCP	PLR		M	R	-	-	-	4	5	6	-	-	-	-	SALEABLE		N/A	N/A	N/A	N/A
								-	12	-	-	15	16	17	18	19	-						
MX150 ASSY RCP 2X10 BK A/11	334722153	A-BK	GCP	PLR		M	R	1	-	-	-	5	6	7	8	-	-	SALEABLE		N/A	N/A	N/A	N/A
								-	12	13	-	15	-	-	-	19	-						
MX150 ASSY RCP 2X10 BK A/11	334722154	A-BK	GCP	PLR		M	R	1	2	3	4	5	6	-	-	-	-	SALEABLE		N/A	N/A	N/A	N/A
								-	-	-	-	-	16	17	18	19	20						
MX150 ASSY RCP 2X10 CPA BK A/9	334722155	A-BK	GCP	PLR	CPA	M	R	-	-	-	-	-	-	-	-	-	-	SALEABLE		N/A	N/A	N/A	N/A
								-	-	-	-	-	16	17	18	19	20						
MX150 ASSY RCP 2X10 CPA BK A/15	334722156	A-BK	GCP	PLR	CPA	M	R	-	-	-	-	-	-	-	-	9	-	SALEABLE		N/A	N/A	N/A	N/A
								-	-	13	14	-	-	17	18	19	20						
MX150 ASSY RCP 2X10 CPA BK A/13	334722157	A-BK	GCP	PLR	CPA	M	R	1	2	3	4	5	6	-	8	-	10	SALEABLE		N/A	N/A	N/A	N/A
								-	-	-	-	-	-	17	18	19	20						
MX150 ASSY RCP 2X10 CPA BK A/8	334722158	A-BK	GCP	PLR	CPA	M	R	-	-	-	-	-	-	-	-	9	10	SALEABLE		N/A	N/A	N/A	N/A
								11	-	-	-	15	16	17	-	-	20						
MX150 ASSY RCP 2X10 CPA LG B/13	334722159	B-LG	GCP	PLR	CPA	M	R	-	-	-	4	5	6	-	-	9	10	SALEABLE		N/A	N/A	N/A	N/A
								11	-	-	14	-	-	-	18	-	-						
MX150 ASSY RCP 2X10 CPA LG B/12	334722160	B-LG	GCP	PLR	CPA	M	R	-	-	-	4	5	6	7	-	-	10	SALEABLE		N/A	N/A	N/A	N/A
								-	-	-	-	-	-	-	18	-	-						
MX150 ASSY RCP 2X10 CPA LG B/14	334722161	B-LG	GCP	PLR	CPA	M	R	-	-	-	4	5	6	-	-	9	10	SALEABLE		N/A	N/A	N/A	N/A
								11	-	-	-	-	-	-	-	-	20						
MX150 ASSY RCP 2X10 CPA LG B/13	334722162	B-LG	GCP	PLR	CPA	M	R	-	-	-	4	5	6	-	-	-	-	SALEABLE		N/A	N/A	N/A	N/A
								-	-	-	14	-	-	-	-	19	20						
MX150 ASSY RCP 2X10 CPA LG B/14	334722163	B-LG	GCP	PLR	CPA	M	R	-	-	-	-	-	-	-	-	9	10	SALEABLE		N/A	N/A	N/A	N/A
								-	-	13	14	-	-	17	18	19	20						
MX150 ASSY RCP 2X10 CPA BK A/12	334722164	A-BK	GCP	PLR	CPA	M	R	-	-	3	4	5	6	-	-	-	-	SALEABLE		N/A	N/A	N/A	N/A
								-	12	-	-	15	16	17	18	19	-						
MX150 ASSY RCP 2X10 BK A/10	334722165	A-BK	GCP	PLR		M	R	-	-	-	-	-	-	-	-	-	-	SALEABLE		N/A	N/A	N/A	N/A
								-	-	13	-	-	-	-	-	19	20						
MX150 ASSY RCP 2X10 CPA BK A/17	334722167	A-BK	GCP	PLR	CPA	M	R	-	2	-	-	-	-	-	8	-	10	SALEABLE		N/A	N/A	N/A	N/A
								-	-	-	-	-	-	17	-	19	-						
MX150 ASSY RCP 2X10 BK A/15	334722168	A-BK	GCP	PLR		M	R	-	-	-	-	-	-	-	-	-	-	SALEABLE		N/A	N/A	N/A	N/A
								-	-	-	-	-	16	-	-	-	-						
MX150 ASSY RCP 2X10 BK A/19	334722169	A-BK	GCP	PLR		M	R	1	2	3	4	5	-	7	8	-	-	SALEABLE		N/A	N/A	N/A	N/A
								-	-	-	-	-	16	-	-	19	20						
MX150 ASSY RCP 2X10 BK A/10	334722170	A-BK	GCP	PLR		M	R	1	2	3	-	-	-	7	-	-	10	SALEABLE		N/A	N/A	N/A	N/A
								-	-	-	-	-	16	-	-	19	20						
MX150 ASSY RCP 2X10 BK A/12	334722171	A-BK	GCP	PLR		M	R	1	2	3	4	5	6	-	8	-	10	SALEABLE		N/A	N/A	N/A	N/A
								-	-	-	14	15	-	17	18	19	20						
MX150 ASSY RCP 2X10 BK A/6	334722172	A-BK	GCP	PLR		M	R	-	-	-	-	-	-	-	-	-	-	SALEABLE		N/A	N/A	N/A	N/A
								-	-	-	14	15	-	17	18	19	20						
MX150 ASSY RCP 2X10 BK A/14	334722173	A-BK	GCP	PLR		M	R	-	2	-	-	-	-	-	8	-	-	SALEABLE		N/A	N/A	N/A	N/A
								-	-	-	-	-	-	17	18	19	20						
MX150 ASSY RCP 2X10 BK A/14	334722174	A-BK	GCP	PLR		M	R	1	2	3	4	5	6	-	8	-	10	SALEABLE		N/A	N/A	N/A	N/A
								-	-	-	14	15	-	-	18	-	20						
MX150 ASSY RCP 2X10 BK A/8	334722175	A-BK	GCP	PLR		M	R	1	2	3	4	5	6	-	8	-	10	SALEABLE		N/A	N/A	N/A	N/A
								-	-	-	-	-	-	-	18	-	20						
MX150 ASSY RCP 2X10 BK A/10	334722176	A-BK	GCP	PLR		M	R	-	-	-	-	-	-	-	-	-	-	SALEABLE		N/A	N/A	N/A	N/A
								-	-	-	14	15	-	-	18	-	20						
MX150 ASSY RCP 2X10 BK A/16	334722177	A-BK	GCP	PLR		M	R	-	-	-	-	-	-	-	-	-	-	SALEABLE		N/A	N/A	N/A	N/A
								-	-	-	-	-	-	-	18	-	20						
MX150 ASSY RCP 2X10 BK A/18	334722178	A-BK	GCP	PLR		M	R	-	-	-	-	-	-	-	-	-	-	SALEABLE		N/A	N/A	N/A	N/A

molex

MX150 RECEPTACLE 2X10 SEALED ASSEMBLY MAT SEAL
BOM AND PIN OUT SHEET

ASSEMBLY DESCRIPTION	ASSEMBLY PART NUMBER	COMPONENT THE PRESENCE OF AN ABBREVIATION INDICATES THE PRESENCE OF THAT COMPONENT						BLOCKED TERMINALS CAVITY WITH A NUMBER INDICATES BLOCKED TERMINAL POSITION CAVITY WITHOUT A NUMBER INDICATES OPEN TERMINAL POSITION										STATUS	COMMENT	OPTIONAL ATTACHMENTS SOLD SEPARATELY			
		HOUSING KEY/COLOR	GROMMET CAP	PLR	CPA	MAT SEAL	RING SEAL													BACKSHELL WITH RIBS	BACKSHELL WITHOUT RIBS	90^0 ADAPTOR WITH RIBS	90^0 ADAPTOR WITHOUT RIBS
MX150 ASSY RCP 2X10 BK A/12	334722179	A-BK	GCP	PLR		M	R	1	2	3	4	5	6	-	-	-	-	SALEABLE		N/A	N/A	N/A	N/A
								-	-	-	-	-	-	-	-	19	20						
MX150 ASSY RCP 2X10 BK A/18	334722180	A-BK	GCP	PLR		M	R	-	-	-	-	-	6	-	-	-	-	SALEABLE		N/A	N/A	N/A	N/A
								-	-	-	-	-	-	-	-	-	20						
MX150 ASSY RCP 2X10 CPA BK A/10	334722181	A-BK	GCP	PLR	CPA	M	R	1	-	3	-	5	-	7	-	9	-	SALEABLE		N/A	N/A	N/A	N/A
								-	12	-	14	-	16	-	18	-	20						
MX150 ASSY RCP 2X10 CPA BK A/10	334722182	A-BK	GCP	PLR	CPA	M	R	-	2	-	4	-	6	-	8	-	10	SALEABLE		N/A	N/A	N/A	N/A
								11	-	13	-	15	-	17	-	19	-						
MX150 ASSY RCP 2X10 BK A/17	334722183	A-BK	GCP	PLR		M	R	-	-	-	-	-	-	-	-	-	-	SALEABLE		N/A	N/A	N/A	N/A
								-	-	-	14	15	16	-	-	-	-						
MX150 ASSY RCP 2X10 BK A/17	334722184	A-BK	GCP	PLR		M	R	-	2	-	-	-	-	-	8	-	-	SALEABLE		N/A	N/A	N/A	N/A
								-	-	-	-	-	16	-	-	-	-						
MX150 ASSY RCP 2X10 BK A/11	334722185	A-BK	GCP	PLR		M	R	1	2	3	4	5	6	-	8	-	10	SALEABLE		N/A	N/A	N/A	N/A
								-	-	-	-	-	16	-	-	-	-						
MX150 ASSY RCP 2X10 BK A/15	334722186	A-BK	GCP	PLR		M	R	-	2	-	-	-	-	-	8	-	-	SALEABLE		N/A	N/A	N/A	N/A
								-	-	-	14	15	16	-	-	-	-						
MX150 ASSY RCP 2X10 BK A/9	334722187	A-BK	GCP	PLR		M	R	1	2	3	4	5	6	-	8	-	10	SALEABLE		N/A	N/A	N/A	N/A
								-	-	-	14	15	16	-	-	-	-						
MX150 ASSY RCP 2X10 BK A/13	334722188	A-BK	GCP	PLR		M	R	-	-	-	-	-	-	-	-	-	-	SALEABLE		N/A	N/A	N/A	N/A
								-	-	-	14	15	16	17	18	19	20						
MX150 ASSY RCP 2X10 BK A/13	334722189	A-BK	GCP	PLR		M	R	-	2	-	-	-	-	-	8	-	-	SALEABLE		N/A	N/A	N/A	N/A
								-	-	-	-	-	16	17	18	19	20						
MX150 ASSY RCP 2X10 BK A/5	334722190	A-BK	GCP	PLR		M	R	1	2	3	4	5	6	-	8	-	10	SALEABLE		N/A	N/A	N/A	N/A
								-	-	-	14	15	16	17	18	19	20						
MX150 ASSY RCP 2X10 CPA BK A/17	334722191	A-BK	GCP	PLR	CPA	M	R	-	-	-	-	-	-	7	-	9	-	SALEABLE		N/A	N/A	N/A	N/A
								-	-	-	-	-	16	-	-	-	-						
MX150 ASSY RCP 2X10 BK A/15	334722192	A-BK	GCP	PLR		M	R	-	-	-	-	-	-	-	-	-	10	SALEABLE		N/A	N/A	N/A	N/A
								-	-	-	14	15	-	17	-	19	-						
MX150 ASSY RCP 2X10 BK A/11	334722193	A-BK	GCP	PLR		M	R	-	2	-	-	-	-	-	8	-	-	SALEABLE		N/A	N/A	N/A	N/A
								-	-	-	14	15	16	17	18	19	20						
MX150 ASSY RCP 2X10 BK A/6	334722194	A-BK	GCP	PLR		M	R	-	-	3	4	5	6	7	8	9	10	SALEABLE		N/A	N/A	N/A	N/A
								-	-	13	14	-	-	17	18	19	20						
MX150 ASSY RCP 2X10 BK A/7	334722195	A-BK	GCP	PLR		M	R	-	-	3	4	5	6	7	8	9	10	SALEABLE		N/A	N/A	N/A	N/A
								-	-	13	14	-	-	17	18	19	-						
MX150 ASSY RCP 2X10 BK A/18	334722196	A-BK	GCP	PLR		M	R	-	-	-	-	-	-	-	-	-	-	SALEABLE		N/A	N/A	N/A	N/A
								-	-	-	-	-	16	-	-	-	20						
MX150 ASSY RCP 2X10 BK A/16	334722197	A-BK	GCP	PLR		M	R	-	-	-	-	-	-	7	-	-	-	SALEABLE		N/A	N/A	N/A	N/A
								-	12	-	-	-	-	17	-	-	20						
MX150 ASSY RCP 2X10 BK A/14	334722198	A-BK	GCP	PLR		M	R	-	-	3	-	-	-	-	-	-	-	SALEABLE		N/A	N/A	N/A	N/A
								-	-	-	-	-	16	17	18	19	20						
MX150 ASSY RCP 2X10 BK A/18	334722199	A-BK	GCP	PLR		M	R	-	2	-	-	-	-	-	8	-	-	SALEABLE		N/A	N/A	N/A	N/A
								-	-	-	-	-	-	-	-	-	-						
MX150 ASSY RCP 2X10 BK A/10	334722200	A-BK	GCP	PLR		M	R	1	2	3	4	5	6	-	8	-	10	SALEABLE		N/A	N/A	N/A	N/A
								-	-	-	14	15	-	-	-	-	-						
MX150 ASSY RCP 2X10 BK A/16	334722201	A-BK	GCP	PLR		M	R	-	2	-	-	-	-	-	8	-	-	SALEABLE		N/A	N/A	N/A	N/A
								-	-	-	14	15	-	-	-	-	-						
MX150 ASSY RCP 2X10 BK A/18	334722202	A-BK	GCP	PLR		M	R	-	-	-	-	-	-	-	-	-	-	SALEABLE		N/A	N/A	N/A	N/A
								-	-	-	14	15	-	-	-	-	-						
MX150 ASSY RCP 2X10 LG B/14	334722203	B-LG	GCP	PLR		M	R	-	2	3	-	-	-	-	-	9	-	SALEABLE		N/A	N/A	N/A	N/A
								-	12	13	-	-	-	-	-	19	-						
MX150 ASSY RCP 2X10 LG B/5	334722204	B-LG	GCP	PLR		M	R	1	2	3	4	5	-	-	8	9	10	SALEABLE		N/A	N/A	N/A	N/A
								-	12	13	14	15	-	-	18	19	20						
MX150 ASSY RCP 2X10 CPA LG B/15	334722205	B-LG	GCP	PLR	CPA	M	R	-	-	-	-	-	-	-	-	-	-	SALEABLE		N/A	N/A	N/A	N/A
								11	-	-	-	15	16	17	-	-	20						

molex

MX150 RECEPTACLE 2X10 SEALED ASSEMBLY MAT SEAL
BOM AND PIN OUT SHEET

ASSEMBLY DESCRIPTION	ASSEMBLY PART NUMBER	COMPONENT						BLOCKED TERMINALS										STATUS	COMMENT	OPTIONAL ATTACHMENTS SOLD SEPARATELY			
		THE PRESENCE OF AN ABBREVIATION INDICATES THE PRESENCE OF THAT COMPONENT						CAVITY WITH A NUMBER INDICATES BLOCKED TERMINAL POSITION CAVITY WITHOUT A NUMBER INDICATES OPEN TERMINAL POSITION															
		HOUSING KEY/COLOR	GROMMET CAP	PLR	CPA	MAT SEAL	RING SEAL													BACKSHELL WITH RIBS	BACKSHELL WITHOUT RIBS	90^0 ADAPTOR WITH RIBS	90^0 ADAPTOR WITHOUT RIBS
MX150 ASSY RCP 2X10 CPA LG B/16	334722206	B-LG	GCP	PLR	CPA	M	R	-	-	-	-	-	-	-	-	-	-	SALEABLE		N/A	N/A	N/A	N/A
								11	-	-	-	15	16	17	-	-	-						
MX150 ASSY RCP 2X10 BK A/17	334722207	A-BK	GCP	PLR		M	R	-	-	-	-	5	-	-	-	-	10	SALEABLE		N/A	N/A	N/A	N/A
								-	-	-	-	-	-	-	-	-	20						
MX150 ASSY RCP 2X10 BK A/15	334722208	A-BK	GCP	PLR		M	R	-	-	-	-	5	-	-	-	-	10	SALEABLE		N/A	N/A	N/A	N/A
								-	-	-	-	-	-	-	18	19	20						
MX150 ASSY RCP 2X10 BK A/19	334722209	A-BK	GCP	PLR		M	R	-	-	-	-	5	-	-	-	-	-	SALEABLE		N/A	N/A	N/A	N/A
								-	-	-	-	-	-	-	-	-	-						
MX150 ASSY RCP 2X10 BK A/18	334722210	A-BK	GCP	PLR		M	R	-	-	-	-	-	-	-	-	-	10	SALEABLE		N/A	N/A	N/A	N/A
								-	-	-	-	-	-	-	-	-	20						
MX150 ASSY RCP 2X10 BK A/15	334722211	A-BK	GCP	PLR		M	R	-	-	3	4	5	-	-	-	-	10	SALEABLE		N/A	N/A	N/A	N/A
								-	-	-	-	-	-	-	-	-	20						
MX150 ASSY RCP 2X10 BK A/17	334722212	A-BK	GCP	PLR		M	R	-	-	3	4	5	-	-	-	-	-	SALEABLE		N/A	N/A	N/A	N/A
								-	-	-	-	-	-	-	-	-	-						
MX150 ASSY RCP 2X10 BK A/12	334722213	A-BK	GCP	PLR		M	R	-	-	3	4	-	-	-	8	9	10	SALEABLE		N/A	N/A	N/A	N/A
								-	12	13	-	-	-	-	-	-	20						
MX150 ASSY RCP 2X10 BK A/16	334722214	A-BK	GCP	PLR		M	R	-	-	3	4	-	-	-	-	-	10	SALEABLE		N/A	N/A	N/A	N/A
								-	-	-	-	-	-	-	-	-	20						
MX150 ASSY RCP 2X10 BK A/18	334722215	A-BK	GCP	PLR		M	R	-	-	3	4	-	-	-	-	-	-	SALEABLE		N/A	N/A	N/A	N/A
								-	-	-	-	-	-	-	-	-	-						
MX150 ASSY RCP 2X10 LG B/7	334722216	B-LG	GCP	PLR		M	R	1	2	3	4	5	6	7	8	-	-	SALEABLE		N/A	N/A	N/A	N/A
								11	12	13	-	-	-	17	-	19	-						
MX150 ASSY RCP 2X10 LG B/15	334722217	B-LG	GCP	PLR		M	R	-	-	-	-	-	-	-	-	-	-	SALEABLE		N/A	N/A	N/A	N/A
								11	12	13	-	-	-	17	-	19	-						
MX150 ASSY RCP 2X10 BK A/15	334722218	A-BK	GCP	PLR		M	R	-	-	-	4	5	-	-	8	-	-	SALEABLE		N/A	N/A	N/A	N/A
								-	-	-	-	-	16	-	-	-	20						
MX150 ASSY RCP 2X10 BK A/15	334722219	A-BK	GCP	PLR		M	R	-	-	-	-	-	-	-	-	-	10	SALEABLE		N/A	N/A	N/A	N/A
								11	12	-	-	-	16	-	-	-	20						
MX150 ASSY RCP 2X10 BK A/12	334722220	A-BK	GCP	PLR		M	R	1	2	3	4	5	-	-	8	-	-	SALEABLE		N/A	N/A	N/A	N/A
								-	-	-	-	-	16	-	-	-	20						
MX150 ASSY RCP 2X10 BK A/12	334722221	A-BK	GCP	PLR		M	R	1	2	3	-	-	-	-	-	-	10	SALEABLE		N/A	N/A	N/A	N/A
								11	12	-	-	-	16	-	-	-	20						
MX150 ASSY RCP 2X10 BK A/17	334722222	A-BK	GCP	PLR		M	R	-	2	3	-	-	6	-	-	-	-	SALEABLE		N/A	N/A	N/A	N/A
								-	-	-	-	-	-	-	-	-	-						
MX150 ASSY RCP 2X10 BK A/16	334722223	A-BK	GCP	PLR		M	R	-	2	3	-	-	-	-	-	-	-	SALEABLE		N/A	N/A	N/A	N/A
								-	-	-	-	-	-	17	18	-	-						
MX150 ASSY RCP 2X10 BK A/15	334722224	A-BK	GCP	PLR		M	R	1	2	3	-	-	6	7	-	-	-	SALEABLE		N/A	N/A	N/A	N/A
								-	-	-	-	-	-	-	-	-	-						
MX150 ASSY RCP 2X10 BK A/12	334722225	A-BK	GCP	PLR		M	R	1	2	3	4	5	6	-	8	-	10	SALEABLE		N/A	N/A	N/A	N/A
								-	-	-	-	-	-	-	-	-	-						
MX150 ASSY RCP 2X10 BK A/17	334722226	A-BK	GCP	PLR		M	R	-	-	-	-	-	-	7	-	-	-	SALEABLE		N/A	N/A	N/A	N/A
								-	12	-	-	-	16	-	-	-	-						
MX150 ASSY RCP 2X10 BK A/4	334722227	A-BK	GCP	PLR		M	R	1	2	3	4	5	6	7	8	-	-	SALEABLE		N/A	N/A	N/A	N/A
								-	12	13	14	15	-	17	18	19	20						
MX150 ASSY RCP 2X10 BK A/8	334722228	A-BK	GCP	PLR		M	R	1	2	3	4	5	6	7	8	-	-	SALEABLE		N/A	N/A	N/A	N/A
								-	-	-	-	-	-	17	18	19	20						
MX150 ASSY RCP 2X10 BK A/12	334722229	A-BK	GCP	PLR		M	R	-	-	-	-	-	-	-	-	-	-	SALEABLE		N/A	N/A	N/A	N/A
								-	12	13	14	15	-	17	18	19	20						
MX150 ASSY RCP 2X10 BK A/12	334722230	A-BK	GCP	PLR		M	R	-	-	-	-	-	-	-	-	9	10	SALEABLE		N/A	N/A	N/A	N/A
								11	-	-	-	-	16	17	18	19	20						
MX150 ASSY RCP 2X10 BK A/4	334722231	A-BK	GCP	PLR		M	R	1	2	3	4	5	6	7	8	9	10	SALEABLE		N/A	N/A	N/A	N/A
								11	-	-	-	-	16	17	18	19	20						
MX150 ASSY RCP 2X10 BK A/8	334722232	A-BK	GCP	PLR		M	R	-	-	-	-	-	-	-	-	9	10	SALEABLE		N/A	N/A	N/A	N/A
								11	12	13	14	15	16	17	18	19	20						

molex

MX150 RECEPTACLE 2X10 SEALED ASSEMBLY MAT SEAL
BOM AND PIN OUT SHEET

ASSEMBLY DESCRIPTION	ASSEMBLY PART NUMBER	COMPONENT THE PRESENCE OF AN ABBREVIATION INDICATES THE PRESENCE OF THAT COMPONENT						BLOCKED TERMINALS CAVITY WITH A NUMBER INDICATES BLOCKED TERMINAL POSITION CAVITY WITHOUT A NUMBER INDICATES OPEN TERMINAL POSITION										STATUS	COMMENT	OPTIONAL ATTACHMENTS SOLD SEPARATELY			
		HOUSING KEY/COLOR	GROMMET CAP	PLR	CPA	MAT SEAL	RING SEAL													BACKSHELL WITH RIBS	BACKSHELL WITHOUT RIBS	90^0 ADAPTOR WITH RIBS	90^0 ADAPTOR WITHOUT RIBS
MX150 ASSY RCP 2X10 BK A/16	334722233	A-BK	GCP	PLR		M	R	-	-	-	-	-	-	-	-	-	-	SALEABLE		N/A	N/A	N/A	N/A
								-	-	-	-	-	-	17	18	19	20						
MX150 ASSY RCP 2X10 BK A/17	334722234	A-BK	GCP	PLR		M	R	-	2	3	-	-	6	-	-	-	-	SALEABLE		N/A	N/A	N/A	N/A
								-	-	-	-	-	-	-	-	-	-						
MX150 ASSY RCP 2X10 BK A/15	334722235	A-BK	GCP	PLR		M	R	-	2	3	-	-	6	-	-	-	-	SALEABLE		N/A	N/A	N/A	N/A
								-	-	-	-	-	-	17	18	-	-						
MX150 ASSY RCP 2X10 BK A/13	334722236	A-BK	GCP	PLR		M	R	-	-	3	4	5	6	7	-	-	10	SALEABLE		N/A	N/A	N/A	N/A
								-	-	-	-	-	-	-	-	-	20						
MX150 ASSY RCP 2X10 BK A/10	334722237	A-BK	GCP	PLR		M	R	-	-	3	4	-	6	7	8	9	10	SALEABLE		N/A	N/A	N/A	N/A
								-	12	13	-	-	-	-	-	-	20						
MX150 ASSY RCP 2X10 BK A/14	334722238	A-BK	GCP	PLR		M	R	-	-	3	4	-	6	7	-	-	10	SALEABLE		N/A	N/A	N/A	N/A
								-	-	-	-	-	-	-	-	-	20						
MX150 ASSY RCP 2X10 BK A/13	334722239	A-BK	GCP	PLR		M	R	-	-	3	4	5	6	7	-	-	-	SALEABLE		N/A	N/A	N/A	N/A
								-	12	13	-	-	-	-	-	-	-						
MX150 ASSY RCP 2X10 BK A/17	334722240	A-BK	GCP	PLR		M	R	-	-	-	-	5	-	-	-	-	-	SALEABLE		N/A	N/A	N/A	N/A
								-	-	-	-	-	-	-	18	19	-						
MX150 ASSY RCP 2X10 BK A/16	334722241	A-BK	GCP	PLR		M	R	-	-	3	4	-	6	7	-	-	-	SALEABLE		N/A	N/A	N/A	N/A
								-	-	-	-	-	-	-	-	-	-						
MX150 ASSY RCP 2X10 BK A/15	334722242	A-BK	GCP	PLR		M	R	-	-	-	-	5	6	7	-	-	-	SALEABLE		N/A	N/A	N/A	N/A
								-	-	-	-	15	16	-	-	-	-						
MX150 ASSY RCP 2X10 LG B/10	334722243	B-LG	GCP	PLR		M	R	-	2	3	-	-	6	-	-	9	10	SALEABLE		N/A	N/A	N/A	N/A
								-	12	13	-	-	16	-	-	19	20						
MX150 ASSY RCP 2X10 LG B/9	334722244	B-LG	GCP	PLR		M	R	-	2	3	-	-	6	-	-	9	10	SALEABLE		N/A	N/A	N/A	N/A
								-	12	13	-	-	16	-	18	19	20						
MX150 ASSY RCP 2X10 LG B/13	334722245	B-LG	GCP	PLR		M	R	-	2	3	-	-	-	-	-	9	-	SALEABLE		N/A	N/A	N/A	N/A
								-	12	13	-	-	-	-	18	19	-						
MX150 ASSY RCP 2X10 LG B/9	334722246	B-LG	GCP	PLR		M	R	1	2	3	-	-	-	-	8	9	10	SALEABLE		N/A	N/A	N/A	N/A
								-	12	13	-	-	-	-	18	19	20						
MX150 ASSY RCP 2X10 LG B/13	334722247	B-LG	GCP	PLR		M	R	-	2	3	-	-	-	-	8	9	-	SALEABLE		N/A	N/A	N/A	N/A
								-	12	13	-	-	-	-	-	19	-						
MX150 ASSY RCP 2X10 LG B/12	334722248	B-LG	GCP	PLR		M	R	-	2	3	-	-	-	-	8	9	-	SALEABLE		N/A	N/A	N/A	N/A
								-	12	13	-	-	-	-	18	19	-						
MX150 ASSY RCP 2X10 LG B/7	334722249	B-LG	GCP	PLR		M	R	1	2	3	4	5	6	7	8	-	-	SALEABLE		N/A	N/A	N/A	N/A
								11	12	13	-	-	-	17	-	19	-						
MX150 ASSY RCP 2X10 LG B/15	334722250	B-LG	GCP	PLR		M	R	-	-	-	-	-	-	-	-	-	-	SALEABLE		N/A	N/A	N/A	N/A
								11	12	13	-	-	-	17	-	19	-						
MX150 ASSY RCP 2X10 CPA BK A/19	334722251	A-BK	GCP	PLR	CPA	M	R	-	-	-	-	5	-	-	-	-	-	SALEABLE		N/A	N/A	N/A	N/A
								-	-	-	-	-	-	-	-	-	-						
MX150 ASSY RCP 2X10 BK A/14	334722252	A-BK	GCP	PLR		M	R	-	2	3	-	-	6	-	-	-	10	SALEABLE		N/A	N/A	N/A	N/A
								-	12	-	14	-	-	-	-	-	-						
MX150 ASSY RCP 2X10 BK A/9	334722253	A-BK	GCP	PLR		M	R	1	2	3	-	-	6	7	-	-	10	SALEABLE		N/A	N/A	N/A	N/A
								11	12	-	14	-	16	-	-	19	-						
MX150 ASSY RCP 2X10 BK A/13	334722254	A-BK	GCP	PLR		M	R	-	-	3	4	5	6	7	-	-	-	SALEABLE		N/A	N/A	N/A	N/A
								-	-	-	-	-	-	-	18	19	-						
MX150 ASSY RCP 2X10 BK A/11	334722255	A-BK	GCP	PLR		M	R	-	-	3	4	5	6	7	-	-	10	SALEABLE		N/A	N/A	N/A	N/A
								-	-	-	-	-	-	-	18	19	20						
MX150 ASSY RCP 2X10 BK A/15	334722256	A-BK	GCP	PLR		M	R	-	-	3	4	5	6	7	-	-	-	SALEABLE		N/A	N/A	N/A	N/A
								-	-	-	-	-	-	-	-	-	-						
MX150 ASSY RCP 2X10 BK A/9	334722257	A-BK	GCP	PLR		M	R	-	-	3	4	-	-	-	-	-	10	SALEABLE		N/A	N/A	N/A	N/A
								11	12	-	-	15	16	17	18	19	20						
MX150 ASSY RCP 2X10 BK A/11	334722258	A-BK	GCP	PLR		M	R	-	-	-	-	-	-	-	-	-	10	SALEABLE		N/A	N/A	N/A	N/A
								11	12	-	-	15	16	17	18	19	20						
MX150 ASSY RCP 2X10 BK A/13	334722259	A-BK	GCP	PLR		M	R	-	-	3	4	-	-	-	-	-	10	SALEABLE		N/A	N/A	N/A	N/A
								11	12	-	-	-	16	-	-	-	20						

molex

MX150 RECEPTACLE 2X10 SEALED ASSEMBLY MAT SEAL
BOM AND PIN OUT SHEET

ASSEMBLY DESCRIPTION	ASSEMBLY PART NUMBER	COMPONENT						BLOCKED TERMINALS										STATUS	COMMENT	OPTIONAL ATTACHMENTS SOLD SEPARATELY			
		THE PRESENCE OF AN ABBREVIATION INDICATES THE PRESENCE OF THAT COMPONENT						CAVITY WITH A NUMBER INDICATES BLOCKED TERMINAL POSITION CAVITY WITHOUT A NUMBER INDICATES OPEN TERMINAL POSITION															
		HOUSING KEY/COLOR	GROMMET CAP	PLR	CPA	MAT SEAL	RING SEAL													BACKSHELL WITH RIBS	BACKSHELL WITHOUT RIBS	90^0 ADAPTOR WITH RIBS	90^0 ADAPTOR WITHOUT RIBS
MX150 ASSY RCP 2X10 BK A/15	334722260	A-BK	GCP	PLR		M	R	-	-	-	-	-	-	-	-	-	-	SALEABLE		N/A	N/A	N/A	N/A
								11	12	13	14	-	-	-	-	-	20						
MX150 ASSY RCP 2X10 BK A/15	334722261	A-BK	GCP	PLR		M	R	-	-	-	4	-	-	7	-	-	-	SALEABLE		N/A	N/A	N/A	N/A
								-	-	-	14	-	-	17	-	19	-						
MX150 ASSY RCP 2X10 BK A/12	334722262	A-BK	GCP	PLR		M	R	-	-	3	4	-	-	7	-	-	-	SALEABLE		N/A	N/A	N/A	N/A
								-	12	-	14	-	-	17	-	19	20						
MX150 ASSY RCP 2X10 BK A/14	334722263	A-BK	GCP	PLR		M	R	1	-	-	4	5	-	-	8	-	-	SALEABLE		N/A	N/A	N/A	N/A
								-	-	-	-	-	16	-	-	-	20						
MX150 ASSY RCP 2X10 BK A/14	334722264	A-BK	GCP	PLR		M	R	1	-	-	-	-	-	-	-	-	10	SALEABLE		N/A	N/A	N/A	N/A
								11	12	-	-	-	16	-	-	-	20						
MX150 ASSY RCP 2X10 BK A/15	334722265	A-BK	GCP	PLR		M	R	-	-	-	-	-	-	-	-	-	10	SALEABLE		N/A	N/A	N/A	N/A
								11	12	-	-	-	16	-	-	-	20						
MX150 ASSY RCP 2X10 CPA BK A/0	334722266	A-BK	GCP	PLR	CPA	M	R	1	2	3	4	5	6	7	8	9	10	SALEABLE		N/A	N/A	N/A	N/A
								11	12	13	14	15	16	17	18	19	20						
MX150 ASSY RCP 2X10 BK A/16	334722267	A-BK	GCP	PLR		M	R	1	-	-	4	5	-	-	8	-	-	SALEABLE		N/A	N/A	N/A	N/A
								-	-	-	-	-	-	-	-	-	-						
MX150 ASSY RCP 2X10 BK A/16	334722268	A-BK	GCP	PLR		M	R	1	-	-	-	-	-	-	-	-	10	SALEABLE		N/A	N/A	N/A	N/A
								11	12	-	-	-	-	-	-	-	-						
MX150 ASSY RCP 2X10 BK A/17	334722269	A-BK	GCP	PLR		M	R	-	-	-	4	5	-	-	8	-	-	SALEABLE		N/A	N/A	N/A	N/A
								-	-	-	-	-	-	-	-	-	-						
MX150 ASSY RCP 2X10 BK A/17	334722270	A-BK	GCP	PLR		M	R	-	-	-	-	-	-	-	-	-	10	SALEABLE		N/A	N/A	N/A	N/A
								11	12	-	-	-	-	-	-	-	-						
MX150 ASSY RCP 2X10 BK A/9	334722271	A-BK	GCP	PLR		M	R	-	2	-	-	-	-	7	8	9	10	SALEABLE		N/A	N/A	N/A	N/A
								-	12	13	-	-	16	17	18	-	20						
MX150 ASSY RCP 2X10 BK A/10	334722272	A-BK	GCP	PLR		M	R	1	2	-	-	-	-	-	8	9	10	SALEABLE		N/A	N/A	N/A	N/A
								-	12	13	-	-	16	17	18	-	-						
MX150 ASSY RCP 2X10 BK A/6	334722273	A-BK	GCP	PLR		M	R	1	2	3	-	-	-	-	8	9	10	SALEABLE		N/A	N/A	N/A	N/A
								-	12	13	14	15	16	17	18	19	-						
MX150 ASSY RCP 2X10 BK A/4	334722274	A-BK	GCP	PLR		M	R	1	2	3	-	-	-	7	8	9	10	SALEABLE		N/A	N/A	N/A	N/A
								-	12	13	14	15	16	17	18	19	20						
MX150 ASSY RCP 2X10 BK A/11	334722275	A-BK	GCP	PLR		M	R	-	2	-	-	-	-	7	8	9	10	SALEABLE		N/A	N/A	N/A	N/A
								-	12	13	-	-	-	17	18	-	-						
MX150 ASSY RCP 2X10 BK A/13	334722276	A-BK	GCP	PLR		M	R	1	-	-	-	-	-	7	-	-	10	SALEABLE		N/A	N/A	N/A	N/A
								-	12	13	-	-	-	17	18	-	-						
MX150 ASSY RCP 2X10 BK A/13	334722277	A-BK	GCP	PLR		M	R	-	-	-	4	5	-	7	8	-	-	SALEABLE		N/A	N/A	N/A	N/A
								-	-	-	-	-	16	-	-	19	20						
MX150 ASSY RCP 2X10 BK A/15	334722278	A-BK	GCP	PLR		M	R	-	-	-	-	-	-	7	-	-	10	SALEABLE		N/A	N/A	N/A	N/A
								-	-	-	-	-	16	-	-	19	20						
MX150 ASSY RCP 2X10 BK A/2	334722279	A-BK	GCP	PLR		M	R	-	2	3	4	5	-	7	8	9	10	SALEABLE		N/A	N/A	N/A	N/A
								11	12	13	14	15	16	17	18	19	20						
MX150 ASSY RCP 2X10 BK A/8	334722280	A-BK	GCP	PLR		M	R	-	2	3	4	5	-	7	8	-	-	SALEABLE		N/A	N/A	N/A	N/A
								-	-	13	14	-	-	17	18	19	20						
MX150 ASSY RCP 2X10 BK A/13	334722281	A-BK	GCP	PLR		M	R	-	2	3	-	5	-	-	-	-	-	SALEABLE		N/A	N/A	N/A	N/A
								-	-	13	-	-	-	17	-	19	20						
MX150 ASSY RCP 2X10 CPA BK A/2	334722282	A-BK	GCP	PLR	CPA	M	R	-	2	3	4	5	-	7	8	9	10	SALEABLE		N/A	N/A	N/A	N/A
								11	12	13	14	15	16	17	18	19	20						
MX150 ASSY RCP 2X10 CPA BK A/8	334722283	A-BK	GCP	PLR	CPA	M	R	-	2	3	4	5	-	7	8	-	-	SALEABLE		N/A	N/A	N/A	N/A
								-	-	13	14	-	-	17	18	19	20						
MX150 ASSY RCP 2X10 CPA BK A/13	334722284	A-BK	GCP	PLR	CPA	M	R	-	2	3	-	5	-	-	-	-	-	SALEABLE		N/A	N/A	N/A	N/A
								-	-	13	-	-	-	17	-	19	20						
MX150 ASSY RCP 2X10 BK A/16	334722285	A-BK	GCP	PLR		M	R	1	-	-	-	-	-	7	-	9	-	SALEABLE		N/A	N/A	N/A	N/A
								-	-	-	-	15	-	-	-	-	-						
MX150 ASSY RCP 2X10 BK A/7	334722286	A-BK	GCP	PLR		M	R	1	2	3	4	5	6	7	8	-	-	SALEABLE		N/A	N/A	N/A	N/A
								-	-	-	-	-	16	17	18	19	20						

molex

MX150 RECEPTACLE 2X10 SEALED ASSEMBLY MAT SEAL
BOM AND PIN OUT SHEET

ASSEMBLY DESCRIPTION	ASSEMBLY PART NUMBER	COMPONENT						BLOCKED TERMINALS										STATUS	COMMENT	OPTIONAL ATTACHMENTS SOLD SEPARATELY			
		THE PRESENCE OF AN ABBREVIATION INDICATES THE PRESENCE OF THAT COMPONENT						CAVITY WITH A NUMBER INDICATES BLOCKED TERMINAL POSITION CAVITY WITHOUT A NUMBER INDICATES OPEN TERMINAL POSITION															
		HOUSING KEY/COLOR	GROMMET CAP	PLR	CPA	MAT SEAL	RING SEAL													BACKSHELL WITH RIBS	BACKSHELL WITHOUT RIBS	90^0 ADAPTOR WITH RIBS	90^0 ADAPTOR WITHOUT RIBS
MX150 ASSY RCP 2X10 BK A/15	334722287	A-BK	GCP	PLR		M	R	-	-	-	-	-	-	-	-	-	-	SALEABLE		N/A	N/A	N/A	N/A
								-	-	-	-	-	16	17	18	19	20						
MX150 ASSY RCP 2X10 BK A/9	334722288	A-BK	GCP	PLR		M	R	1	2	3	4	5	6	7	8	-	-	SALEABLE		N/A	N/A	N/A	N/A
								-	-	-	-	-	-	-	18	19	20						
MX150 ASSY RCP 2X10 BK A/19	334722289	A-BK	GCP	PLR		M	R	-	-	-	-	-	-	-	-	-	-	SALEABLE		N/A	N/A	N/A	N/A
								-	-	-	-	-	-	-	18	-	-						
MX150 ASSY RCP 2X10 CPA BK A/12	334722290	A-BK	GCP	PLR	CPA	M	R	-	-	-	-	-	-	-	-	-	-	SALEABLE		N/A	N/A	N/A	N/A
								11	12	13	14	15	16	17	18	-	-						
MX150 ASSY RCP 2X10 CPA LG B/15	334722291	B-LG	GCP	PLR	CPA	M	R	-	-	3	-	-	6	7	-	-	-	SALEABLE		N/A	N/A	N/A	N/A
								-	12	-	-	-	-	17	-	-	-						
MX150 ASSY RCP 2X10 BK A/6	334722292	A-BK	GCP	PLR		M	R	-	2	-	-	-	-	-	8	9	10	SALEABLE		N/A	N/A	N/A	N/A
								11	12	13	14	15	16	17	18	19	20						
MX150 ASSY RCP 2X10 BK A/14	334722293	A-BK	GCP	PLR		M	R	-	-	-	-	-	-	-	-	9	10	SALEABLE		N/A	N/A	N/A	N/A
								11	12	13	-	-	-	-	-	-	20						
MX150 ASSY RCP 2X10 BK A/12	334722294	A-BK	GCP	PLR		M	R	-	2	-	-	-	-	-	8	9	10	SALEABLE		N/A	N/A	N/A	N/A
								11	12	13	-	-	-	-	-	-	20						
MX150 ASSY RCP 2X10 BK A/6	334722295	A-BK	GCP	PLR		M	R	1	2	3	4	5	6	7	8	9	10	SALEABLE		N/A	N/A	N/A	N/A
								11	12	13	-	-	-	-	-	-	20						
MX150 ASSY RCP 2X10 BK A/17	334722296	A-BK	GCP	PLR		M	R	-	-	-	-	-	-	-	-	9	-	SALEABLE		N/A	N/A	N/A	N/A
								-	-	13	-	-	-	-	-	-	20						
MX150 ASSY RCP 2X10 BK A/15	334722297	A-BK	GCP	PLR		M	R	-	2	-	-	-	-	-	8	9	-	SALEABLE		N/A	N/A	N/A	N/A
								-	-	13	-	-	-	-	-	-	20						
MX150 ASSY RCP 2X10 BK A/11	334722298	A-BK	GCP	PLR		M	R	-	-	-	-	-	-	-	-	9	-	SALEABLE		N/A	N/A	N/A	N/A
								-	-	13	14	15	16	17	18	19	20						
MX150 ASSY RCP 2X10 BK A/9	334722299	A-BK	GCP	PLR		M	R	-	2	-	-	-	-	-	8	9	-	SALEABLE		N/A	N/A	N/A	N/A
								-	-	13	14	15	16	17	18	19	20						
MX150 ASSY RCP 2X10 BK A/9	334722300	A-BK	GCP	PLR		M	R	1	2	3	4	5	6	7	8	9	-	SALEABLE		N/A	N/A	N/A	N/A
								-	-	13	-	-	-	-	-	-	20						
MX150 ASSY RCP 2X10 BK A/3	334722301	A-BK	GCP	PLR		M	R	1	2	3	4	5	6	7	8	9	-	SALEABLE		N/A	N/A	N/A	N/A
								-	-	13	14	15	16	17	18	19	20						
MX150 ASSY RCP 2X10 BK A/6	334722302	A-BK	GCP	PLR		M	R	1	2	3	4	-	-	7	8	9	-	SALEABLE		N/A	N/A	N/A	N/A
								-	12	13	14	-	-	17	18	19	20						
MX150 ASSY RCP 2X10 BK A/8	334722303	A-BK	GCP	PLR		M	R	1	2	3	-	-	-	7	8	9	-	SALEABLE		N/A	N/A	N/A	N/A
								-	12	13	-	-	-	17	18	19	20						
MX150 ASSY RCP 2X10 BK A/3	334722304	A-BK	GCP	PLR		M	R	-	2	3	4	5	6	7	8	9	10	SALEABLE		N/A	N/A	N/A	N/A
								11	12	-	14	15	16	17	18	19	-						
MX150 ASSY RCP 2X10 BK A/9	334722305	A-BK	GCP	PLR		M	R	-	2	3	4	-	-	7	8	9	-	SALEABLE		N/A	N/A	N/A	N/A
								-	12	-	14	-	-	17	18	19	-						
MX150 ASSY RCP 2X10 BK A/11	334722306	A-BK	GCP	PLR		M	R	-	2	3	-	-	-	7	8	9	-	SALEABLE		N/A	N/A	N/A	N/A
								-	12	-	-	-	-	17	18	19	-						
MX150 ASSY RCP 2X10 BK A/14	334722307	A-BK	GCP	PLR		M	R	1	-	3	-	-	-	-	-	9	-	SALEABLE		N/A	N/A	N/A	N/A
								-	12	13	-	-	-	-	-	-	20						
MX150 ASSY RCP 2X10 BK A/15	334722308	A-BK	GCP	PLR		M	R	-	-	3	4	-	-	-	-	9	-	SALEABLE		N/A	N/A	N/A	N/A
								-	12	-	14	-	-	-	-	-	-						
MX150 ASSY RCP 2X10 BK A/17	334722309	A-BK	GCP	PLR		M	R	-	-	3	-	-	-	-	-	9	-	SALEABLE		N/A	N/A	N/A	N/A
								-	12	-	-	-	-	-	-	-	-						
MX150 ASSY RCP 2X10 BK A/12	334722310	A-BK	GCP	PLR		M	R	1	-	3	4	-	-	-	-	9	-	SALEABLE		N/A	N/A	N/A	N/A
								-	12	13	14	-	-	-	-	-	20						
MX150 ASSY RCP 2X10 BK A/9	334722311	A-BK	GCP	PLR		M	R	1	2	3	4	5	6	7	8	9	10	SALEABLE		N/A	N/A	N/A	N/A
								-	-	-	-	-	-	17	-	-	-						
MX150 ASSY RCP 2X10 BK A/7	334722312	A-BK	GCP	PLR		M	R	1	2	3	4	5	6	7	8	9	10	SALEABLE		N/A	N/A	N/A	N/A
								-	-	-	14	15	-	17	-	-	-						
MX150 ASSY RCP 2X10 CPA BK A/19	334722313	A-BK	GCP	PLR	CPA	M	R	-	-	-	-	-	-	-	-	-	-	SALEABLE		N/A	N/A	N/A	N/A
								-	-	-	-	-	-	-	18	-	-						

molex

MX150 RECEPTACLE 2X10 SEALED ASSEMBLY MAT SEAL
BOM AND PIN OUT SHEET

ASSEMBLY DESCRIPTION	ASSEMBLY PART NUMBER	COMPONENT: THE PRESENCE OF AN ABBREVIATION INDICATES THE PRESENCE OF THAT COMPONENT						BLOCKED TERMINALS: CAVITY WITH A NUMBER INDICATES BLOCKED TERMINAL POSITION; CAVITY WITHOUT A NUMBER INDICATES OPEN TERMINAL POSITION										STATUS	COMMENT	OPTIONAL ATTACHMENTS SOLD SEPARATELY			
		HOUSING KEY/COLOR	GROMMET CAP	PLR	CPA	MAT SEAL	RING SEAL													BACKSHELL WITH RIBS	BACKSHELL WITHOUT RIBS	90^0 ADAPTOR WITH RIBS	90^0 ADAPTOR WITHOUT RIBS
MX150 ASSY RCP 2X10 CPA BK A/9	334722314	A-BK	GCP	PLR	CPA	M	R	-	2	-	4	5	6	-	8	9	10	SALEABLE		N/A	N/A	N/A	N/A
								-	-	-	14	-	-	-	18	19	20						
MX150 ASSY RCP 2X10 CPA BK A/13	334722315	A-BK	GCP	PLR	CPA	M	R	-	2	-	-	5	6	-	-	9	10	SALEABLE		N/A	N/A	N/A	N/A
								-	-	-	-	-	-	-	-	19	20						
MX150 ASSY RCP 2X10 CPA BK A/13	334722316	A-BK	GCP	PLR	CPA	M	R	1	-	3	-	-	6	-	-	9	10	SALEABLE		N/A	N/A	N/A	N/A
								-	12	13	-	-	-	-	-	-	-						
MX150 ASSY RCP 2X10 LG B/12	334722317	B-LG	GCP	PLR		M	R	-	2	3	-	-	-	-	8	9	-	SALEABLE		N/A	N/A	N/A	N/A
								11	12	13	-	-	-	-	-	19	-						
MX150 ASSY RCP 2X10 LG B/11	334722318	B-LG	GCP	PLR		M	R	-	2	3	-	-	-	-	8	9	-	SALEABLE		N/A	N/A	N/A	N/A
								11	12	13	-	-	-	-	18	19	-						
MX150 ASSY RCP 2X10 BK A/3	334722319	A-BK	GCP	PLR		M	R	1	-	3	4	5	-	7	8	9	10	SALEABLE		N/A	N/A	N/A	N/A
								11	12	13	14	15	16	17	18	19	-						
MX150 ASSY RCP 2X10 LG B/17	334722320	B-LG	GCP	PLR		M	R	-	-	-	4	-	-	-	-	-	-	SALEABLE		N/A	N/A	N/A	N/A
								-	-	13	-	-	16	-	-	-	-						
MX150 ASSY RCP 2X10 BK A/17	334722321	A-BK	GCP	PLR		M	R	-	-	-	-	5	6	-	-	-	-	SALEABLE		N/A	N/A	N/A	N/A
								-	-	-	-	-	-	-	-	19	-						
MX150 ASSY RCP 2X10 BK A/14	334722322	A-BK	GCP	PLR		M	R	-	-	3	4	-	-	7	-	-	10	SALEABLE		N/A	N/A	N/A	N/A
								-	-	-	-	-	16	17	-	-	-						
MX150 ASSY RCP 2X10 LG B/12	334722323	B-LG	GCP	PLR		M	R	-	2	-	4	-	-	-	8	9	-	SALEABLE		N/A	N/A	N/A	N/A
								11	-	-	14	-	-	-	-	19	20						
MX150 ASSY RCP 2X10 LG B/13	334722324	B-LG	GCP	PLR		M	R	-	2	-	4	-	-	-	8	9	-	SALEABLE		N/A	N/A	N/A	N/A
								-	-	-	14	-	-	-	-	19	20						
MX150 ASSY RCP 2X10 LG B/12	334722325	B-LG	GCP	PLR		M	R	-	2	-	4	-	-	-	8	9	-	SALEABLE		N/A	N/A	N/A	N/A
								-	-	-	14	-	-	-	18	19	20						
MX150 ASSY RCP 2X10 LG B/11	334722326	B-LG	GCP	PLR		M	R	-	2	-	4	-	-	-	8	9	-	SALEABLE		N/A	N/A	N/A	N/A
								11	-	-	14	-	-	-	18	19	20						
MX150 ASSY RCP 2X10 LG B/9	334722327	B-LG	GCP	PLR		M	R	1	2	3	4	-	-	-	8	9	10	SALEABLE		N/A	N/A	N/A	N/A
								-	-	-	14	-	-	-	18	19	20						
MX150 ASSY RCP 2X10 LG B/13	334722328	B-LG	GCP	PLR		M	R	-	2	-	4	-	-	-	-	9	-	SALEABLE		N/A	N/A	N/A	N/A
								-	-	-	14	-	-	-	18	19	20						
MX150 ASSY RCP 2X10 LG B/14	334722329	B-LG	GCP	PLR		M	R	-	2	-	4	-	-	-	-	9	-	SALEABLE		N/A	N/A	N/A	N/A
								-	-	-	14	-	-	-	-	19	20						
MX150 ASSY RCP 2X10 LG B/12	334722330	B-LG	GCP	PLR		M	R	-	2	3	4	-	-	-	-	9	10	SALEABLE		N/A	N/A	N/A	N/A
								-	-	-	-	-	-	-	18	19	20						
MX150 ASSY RCP 2X10 LG B/13	334722331	B-LG	GCP	PLR		M	R	-	2	3	4	-	-	-	-	9	10	SALEABLE		N/A	N/A	N/A	N/A
								-	-	-	-	-	-	-	-	19	20						
MX150 ASSY RCP 2X10 CPA BK A/17	334722332	A-BK	GCP	PLR	CPA	M	R	-	-	-	-	-	6	-	-	9	10	SALEABLE		N/A	N/A	N/A	N/A
								-	-	-	-	-	-	-	-	-	-						
MX150 ASSY RCP 2X10 BK A/14	334722333	A-BK	GCP	PLR		M	R	-	2	3	-	5	6	-	-	-	-	SALEABLE		N/A	N/A	N/A	N/A
								-	12	13	-	-	-	-	-	-	-						
MX150 ASSY RCP 2X10 BK A/15	334722338	A-BK	GCP	PLR		M	R	1	-	3	4	5	-	-	-	-	-	SALEABLE		N/A	N/A	N/A	N/A
								-	-	-	-	-	-	-	-	19	-						
MX150 ASSY RCP 2X10 BK A/17	334722339	A-BK	GCP	PLR		M	R	-	2	-	-	-	6	-	-	-	-	SALEABLE		N/A	N/A	N/A	N/A
								-	-	-	-	-	-	-	-	-	20						
MX150 ASSY RCP 2X10 LG B/12	334722341	B-LG	GCP	PLR		M	R	-	-	-	4	-	-	7	8	9	10	SALEABLE		N/A	N/A	N/A	N/A
								11	12	13	-	-	-	-	-	-	-						
MX150 ASSY RCP 2X10 LG B/19	334722342	B-LG	GCP	PLR		M	R	-	-	-	-	-	-	-	-	-	-	SALEABLE		N/A	N/A	N/A	N/A
								-	-	-	-	-	16	-	-	-	-						
MX150 ASSY RCP 2X10 BK A/13	334722343	A-BK	GCP	PLR		M	R	1	-	-	-	5	6	-	-	-	10	SALEABLE		N/A	N/A	N/A	N/A
								11	-	-	-	-	-	-	-	19	20						
MX150 ASSY RCP 2X10 CPA BK A/16	334722344	A-BK	GCP	PLR	CPA	M	R	-	2	-	-	-	6	-	-	-	10	SALEABLE		N/A	N/A	N/A	N/A
								-	-	-	-	15	-	-	-	-	-						
MX150 ASSY RCP 2X10 BK A/10	334722345	A-BK	GCP	PLR		M	R	-	-	-	-	5	6	7	8	9	-	SALEABLE		N/A	N/A	N/A	N/A
								11	12	13	-	-	-	17	18	-	-						

molex

MX150 RECEPTACLE 2X10 SEALED ASSEMBLY MAT SEAL
BOM AND PIN OUT SHEET

ASSEMBLY DESCRIPTION	ASSEMBLY PART NUMBER	COMPONENT						BLOCKED TERMINALS										STATUS	COMMENT	OPTIONAL ATTACHMENTS SOLD SEPARATELY			
		THE PRESENCE OF AN ABBREVIATION INDICATES THE PRESENCE OF THAT COMPONENT						CAVITY WITH A NUMBER INDICATES BLOCKED TERMINAL POSITION CAVITY WITHOUT A NUMBER INDICATES OPEN TERMINAL POSITION															
		HOUSING KEY/COLOR	GROMMET CAP	PLR	CPA	MAT SEAL	RING SEAL													BACKSHELL WITH RIBS	BACKSHELL WITHOUT RIBS	90^0 ADAPTOR WITH RIBS	90^0 ADAPTOR WITHOUT RIBS
MX150 ASSY RCP 2X10 BK A/7	334722346	A-BK	GCP	PLR		M	R	-	2	3	4	5	6	7	8	9	-	SALEABLE		N/A	N/A	N/A	N/A
								11	-	13	14	-	-	-	-	19	20						
MX150 ASSY RCP 2X10 BK A/8	334722347	A-BK	GCP	PLR		M	R	-	2	3	4	5	6	7	8	9	-	SALEABLE		N/A	N/A	N/A	N/A
								11	-	-	14	-	-	-	-	19	20						
MX150 ASSY RCP 2X10 BK A/15	334722348	A-BK	GCP	PLR		M	R	-	-	-	-	5	6	7	8	9	-	SALEABLE		N/A	N/A	N/A	N/A
								-	-	-	-	-	-	-	-	-	-						
MX150 ASSY RCP 2X10 BK A/4	334722349	A-BK	GCP	PLR		M	R	1	2	3	4	-	6	7	8	9	10	SALEABLE		N/A	N/A	N/A	N/A
								-	12	13	14	15	16	17	-	-	20						
MX150 ASSY RCP 2X10 BK A/15	334722350	A-BK	GCP	PLR		M	R	-	-	3	4	5	-	-	-	-	-	SALEABLE		N/A	N/A	N/A	N/A
								-	-	-	-	-	-	-	18	19	-						
MX150 ASSY RCP 2X10 BK A/6	334722351	A-BK	GCP	PLR		M	R	-	-	3	4	-	6	7	8	9	10	SALEABLE		N/A	N/A	N/A	N/A
								-	12	13	14	15	16	17	-	-	20						
MX150 ASSY RCP 2X10 BK A/9	334722352	A-BK	GCP	PLR		M	R	-	-	3	4	-	6	-	8	9	-	SALEABLE		N/A	N/A	N/A	N/A
								-	12	13	14	15	16	17	-	-	-						
MX150 ASSY RCP 2X10 BK A/14	334722353	A-BK	GCP	PLR		M	R	-	-	3	4	5	6	-	-	-	-	SALEABLE		N/A	N/A	N/A	N/A
								-	-	-	-	-	-	-	18	19	-						
MX150 ASSY RCP 2X10 BK A/12	334722354	A-BK	GCP	PLR		M	R	-	-	3	4	5	-	7	-	-	10	SALEABLE		N/A	N/A	N/A	N/A
								-	-	-	-	-	-	-	18	19	20						
MX150 ASSY RCP 2X10 BK A/18	334722359	A-BK	GCP	PLR		M	R	-	-	-	-	-	-	-	-	-	-	SALEABLE		N/A	N/A	N/A	N/A
								-	-	-	-	-	-	-	-	19	20						
MX150 ASSY RCP 2X10 LG B/19	334722360	B-LG	GCP	PLR		M	R	-	-	-	-	-	-	-	-	-	-	SALEABLE		N/A	N/A	N/A	N/A
								-	-	-	-	-	-	-	-	-	20						
MX150 ASSY RCP 2X10 LG B/17	334722361	B-LG	GCP	PLR		M	R	-	-	-	-	-	-	-	-	-	-	SALEABLE		N/A	N/A	N/A	N/A
								-	-	-	-	-	-	17	18	-	20						
MX150 ASSY RCP 2X10 LG B/17	334722362	B-LG	GCP	PLR		M	R	-	-	-	-	-	-	-	-	-	-	SALEABLE		N/A	N/A	N/A	N/A
								-	-	-	-	15	-	-	-	19	20						
MX150 ASSY RCP 2X10 LG B/11	334722363	B-LG	GCP	PLR		M	R	-	-	-	-	-	-	-	-	-	10	SALEABLE		N/A	N/A	N/A	N/A
								11	12	13	-	-	16	17	18	19	20						
MX150 ASSY RCP 2X10 LG B/15	334722364	B-LG	GCP	PLR		M	R	-	-	-	-	-	-	-	-	-	-	SALEABLE		N/A	N/A	N/A	N/A
								-	-	-	-	-	16	17	18	19	20						
MX150 ASSY RCP 2X10 LG B/9	334722365	B-LG	GCP	PLR		M	R	-	2	-	-	-	-	-	-	-	-	SALEABLE		N/A	N/A	N/A	N/A
								11	12	13	14	15	16	17	18	19	20						
MX150 ASSY RCP 2X10 CPA LG B/17	334722366	B-LG	GCP	PLR	CPA	M	R	-	-	-	4	-	-	-	-	-	-	SALEABLE		N/A	N/A	N/A	N/A
								-	-	13	-	-	16	-	-	-	-						
MX150 ASSY RCP 2X10 CPA LG B/12	334722367	B-LG	GCP	PLR	CPA	M	R	-	-	-	4	-	-	7	8	9	10	SALEABLE		N/A	N/A	N/A	N/A
								11	12	13	-	-	-	-	-	-	-						
MX150 ASSY RCP 2X10 CPA LG B/19	334722368	B-LG	GCP	PLR	CPA	M	R	-	-	-	-	-	-	-	-	-	-	SALEABLE		N/A	N/A	N/A	N/A
								-	-	-	-	-	16	-	-	-	-						
MX150 ASSY RCP 2X10 LG B/15	334722369	B-LG	GCP	PLR		M	R	-	-	3	-	-	-	-	-	-	-	SALEABLE		N/A	N/A	N/A	N/A
								11	-	-	14	-	-	17	-	19	-						
MX150 ASSY RCP 2X10 CS BK A/20	334722501	A-BK-CLIP	GCO	PLR		M	R	-	-	-	-	-	-	-	-	-	-	SALEABLE		N/A	N/A	N/A	N/A
								-	-	-	-	-	-	-	-	-	-						
MX150 ASSY RCP 2X10 CS LG B/20	334722502	B-LG-CLIP	GCO	PLR		M	R	-	-	-	-	-	-	-	-	-	-	SALEABLE		N/A	N/A	N/A	N/A
								-	-	-	-	-	-	-	-	-	-						
MX150 ASSY RCP 2X10 CS DG C/20	334722503	C-DG-CLIP	GCO	PLR		M	R	-	-	-	-	-	-	-	-	-	-	SALEABLE		N/A	N/A	N/A	N/A
								-	-	-	-	-	-	-	-	-	-						
MX150 ASSY RCP 2X10 CS SG D/20	334722504	D-SG-CLIP	GCO	PLR		M	R	-	-	-	-	-	-	-	-	-	-	SALEABLE		N/A	N/A	N/A	N/A
								-	-	-	-	-	-	-	-	-	-						
MX150 ASSY RCP 2X10 CS YW A/20	334722505	A-YW-CLIP	GCO	PLR		M	R	-	-	-	-	-	-	-	-	-	-	SALEABLE		N/A	N/A	N/A	N/A
								-	-	-	-	-	-	-	-	-	-						
MX150 ASSY RCP 2X10 CS CPA BK A/20	334722506	A-BK-CLIP	GCO	PLR	CPA	M	R	-	-	-	-	-	-	-	-	-	-	SALEABLE		N/A	N/A	N/A	N/A
								-	-	-	-	-	-	-	-	-	-						
MX150 ASSY RCP 2X10 CS CPA LG B/20	334722507	B-LG-CLIP	GCO	PLR	CPA	M	R	-	-	-	-	-	-	-	-	-	-	SALEABLE		N/A	N/A	N/A	N/A
								-	-	-	-	-	-	-	-	-	-						

molex

MX150 RECEPTACLE 2X10 SEALED ASSEMBLY MAT SEAL
BOM AND PIN OUT SHEET

ASSEMBLY DESCRIPTION	ASSEMBLY PART NUMBER	COMPONENT						BLOCKED TERMINALS										STATUS	COMMENT	OPTIONAL ATTACHMENTS SOLD SEPARATELY			
		THE PRESENCE OF AN ABBREVIATION INDICATES THE PRESENCE OF THAT COMPONENT						CAVITY WITH A NUMBER INDICATES BLOCKED TERMINAL POSITION CAVITY WITHOUT A NUMBER INDICATES OPEN TERMINAL POSITION															
		HOUSING KEY/COLOR	GROMMET CAP	PLR	CPA	MAT SEAL	RING SEAL													BACKSHELL WITH RIBS	BACKSHELL WITHOUT RIBS	90^0 ADAPTOR WITH RIBS	90^0 ADAPTOR WITHOUT RIBS
MX150 ASSY RCP 2X10 CS CPA DG C/20	334722508	C-DG-CLIP	GCO	PLR	CPA	M	R	-	-	-	-	-	-	-	-	-	-	SALEABLE		N/A	N/A	N/A	N/A
								-	-	-	-	-	-	-	-	-	-						
MX150 ASSY RCP 2X10 CS CPA SG D/20	334722509	D-SG-CLIP	GCO	PLR	CPA	M	R	-	-	-	-	-	-	-	-	-	-	SALEABLE		N/A	N/A	N/A	N/A
								-	-	-	-	-	-	-	-	-	-						
MX150 ASSY RCP 2X10 CS CPA YW A/20	334722510	A-YW-CLIP	GCO	PLR	CPA	M	R	-	-	-	-	-	-	-	-	-	-	SALEABLE		N/A	N/A	N/A	N/A
								-	-	-	-	-	-	-	-	-	-						
MX150 ASSY RCP 2X10 CS BK A/13	334722511	A-BK-CLIP	GCP	PLR		M	R	-	-	-	-	5	6	7	8	-	-	SALEABLE		N/A	N/A	N/A	N/A
								11	12	-	-	15	-	-	-	-	-						
MX150 ASSY RCP 2X10 CS BK A/14	334722512	A-BK-CLIP	GCP	PLR		M	R	-	-	-	-	5	6	7	8	-	-	SALEABLE		N/A	N/A	N/A	N/A
								11	12	-	-	-	-	-	-	-	-						
MX150 ASSY RCP 2X10 CS BK A/8	334722513	A-BK-CLIP	GCP	PLR		M	R	-	-	-	4	5	6	7	8	9	10	SALEABLE		N/A	N/A	N/A	N/A
								11	12	13	14	15	-	-	-	-	-						
MX150 ASSY RCP 2X10 CS BK A/11	334722514	A-BK-CLIP	GCP	PLR		M	R	-	-	-	-	5	6	7	8	-	-	SALEABLE		N/A	N/A	N/A	N/A
								11	12	13	14	15	-	-	-	-	-						
MX150 ASSY RCP 2X10 CS BK A/7	334722515	A-BK-CLIP	GCP	PLR		M	R	-	-	-	4	5	6	7	-	9	10	SALEABLE		N/A	N/A	N/A	N/A
								11	12	13	14	15	-	-	18	19	-						
MX150 ASSY RCP 2X10 CS BK A/12	334722516	A-BK-CLIP	GCP	PLR		M	R	-	-	-	4	5	6	7	-	9	10	SALEABLE		N/A	N/A	N/A	N/A
								-	-	-	-	-	-	-	18	19	-						
MX150 ASSY RCP 2X10 CS BK A/10	334722517	A-BK-CLIP	GCP	PLR		M	R	-	-	-	-	5	6	7	-	-	-	SALEABLE		N/A	N/A	N/A	N/A
								11	12	13	14	15	-	-	18	19	-						
MX150 ASSY RCP 2X10 CS BK A/16	334722518	A-BK-CLIP	GCP	PLR		M	R	-	-	-	-	5	6	7	8	-	-	SALEABLE		N/A	N/A	N/A	N/A
								-	-	-	-	-	-	-	-	-	-						
MX150 ASSY RCP 2X10 CS BK A/13	334722520	A-BK-CLIP	GCP	PLR		M	R	-	-	-	-	5	6	7	-	-	-	SALEABLE		N/A	N/A	N/A	N/A
								11	12	-	-	-	-	-	18	19	-						
MX150 ASSY RCP 2X10 CS BK A/6	334722521	A-BK-CLIP	GCP	PLR		M	R	-	-	-	4	5	6	7	8	9	10	SALEABLE		N/A	N/A	N/A	N/A
								11	12	13	14	15	-	-	18	19	-						
MX150 ASSY RCP 2X10 CS BK A/8	334722522	A-BK-CLIP	GCP	PLR		M	R	-	-	-	4	5	6	7	8	9	10	SALEABLE		N/A	N/A	N/A	N/A
								-	-	13	14	15	-	-	18	19	-						
MX150 ASSY RCP 2X10 CS BK A/9	334722523	A-BK-CLIP	GCP	PLR		M	R	-	-	-	-	5	6	7	8	-	-	SALEABLE		N/A	N/A	N/A	N/A
								11	12	13	14	15	-	-	18	19	-						
MX150 ASSY RCP 2X10 CS BK A/11	334722524	A-BK-CLIP	GCP	PLR		M	R	-	-	-	-	5	6	7	8	-	-	SALEABLE		N/A	N/A	N/A	N/A
								-	-	13	14	15	-	-	18	19	-						
MX150 ASSY RCP 2X10 CS BK A/9	334722525	A-BK-CLIP	GCP	PLR		M	R	-	-	-	4	5	6	7	8	9	10	SALEABLE		N/A	N/A	N/A	N/A
								11	12	-	-	-	-	-	18	19	-						
MX150 ASSY RCP 2X10 CS BK A/11	334722526	A-BK-CLIP	GCP	PLR		M	R	-	-	-	4	5	6	7	8	9	10	SALEABLE		N/A	N/A	N/A	N/A
								-	-	-	-	-	-	-	18	19	-						
MX150 ASSY RCP 2X10 CS BK A/12	334722527	A-BK-CLIP	GCP	PLR		M	R	-	-	-	-	5	6	7	8	-	-	SALEABLE		N/A	N/A	N/A	N/A
								11	12	-	-	-	-	-	18	19	-						
MX150 ASSY RCP 2X10 CS BK A/14	334722528	A-BK-CLIP	GCP	PLR		M	R	-	-	-	-	5	6	7	8	-	-	SALEABLE		N/A	N/A	N/A	N/A
								-	-	-	-	-	-	-	18	19	-						
MX150 ASSY RCP 2X10 CS BK A/9	334722529	A-BK-CLIP	GCP	PLR		M	R	-	-	-	4	-	-	7	8	9	10	SALEABLE		N/A	N/A	N/A	N/A
								11	12	13	14	-	-	-	18	19	-						
MX150 ASSY RCP 2X10 CS BK A/11	334722530	A-BK-CLIP	GCP	PLR		M	R	-	-	-	4	-	-	7	8	9	10	SALEABLE		N/A	N/A	N/A	N/A
								-	-	13	14	-	-	-	18	19	-						
MX150 ASSY RCP 2X10 CS BK A/12	334722531	A-BK-CLIP	GCP	PLR		M	R	-	-	-	-	-	-	7	8	-	-	SALEABLE		N/A	N/A	N/A	N/A
								11	12	13	14	-	-	-	18	19	-						
MX150 ASSY RCP 2X10 CS BK A/14	334722532	A-BK-CLIP	GCP	PLR		M	R	-	-	-	-	-	-	7	8	-	-	SALEABLE		N/A	N/A	N/A	N/A
								-	-	13	14	-	-	-	18	19	-						
MX150 ASSY RCP 2X10 CS BK A/15	334722533	A-BK-CLIP	GCP	PLR		M	R	-	-	-	-	5	6	7	-	-	-	SALEABLE		N/A	N/A	N/A	N/A
								-	-	-	-	-	-	-	18	19	-						
MX150 ASSY RCP 2X10 CS BK A/10	334722534	A-BK-CLIP	GCP	PLR		M	R	-	-	-	4	5	6	7	8	9	10	SALEABLE		N/A	N/A	N/A	N/A
								11	12	-	-	15	-	-	-	-	-						
MX150 ASSY RCP 2X10 CS BK A/8	334722535	A-BK-CLIP	GCP	PLR		M	R	-	-	-	4	5	6	7	8	9	10	SALEABLE		N/A	N/A	N/A	N/A
								11	12	-	-	15	-	-	18	19	-						

molex

MX150 RECEPTACLE 2X10 SEALED ASSEMBLY MAT SEAL
BOM AND PIN OUT SHEET

ASSEMBLY DESCRIPTION	ASSEMBLY PART NUMBER	COMPONENT: THE PRESENCE OF AN ABBREVIATION INDICATES THE PRESENCE OF THAT COMPONENT						BLOCKED TERMINALS: CAVITY WITH A NUMBER INDICATES BLOCKED TERMINAL POSITION; CAVITY WITHOUT A NUMBER INDICATES OPEN TERMINAL POSITION										STATUS	COMMENT	OPTIONAL ATTACHMENTS SOLD SEPARATELY			
		HOUSING KEY/COLOR	GROMMET CAP	PLR	CPA	MAT SEAL	RING SEAL													BACKSHELL WITH RIBS	BACKSHELL WITHOUT RIBS	90^0 ADAPTOR WITH RIBS	90^0 ADAPTOR WITHOUT RIBS
MX150 ASSY RCP 2X10 CS BK A/10	334722536	A-BK-CLIP	GCP	PLR		M	R	-	-	-	4	5	6	7	8	9	10	SALEABLE		N/A	N/A	N/A	N/A
								-	-	-	-	15	-	-	18	19	-						
MX150 ASSY RCP 2X10 CS BK A/11	334722537	A-BK-CLIP	GCP	PLR		M	R	-	-	-	-	5	6	7	8	-	-	SALEABLE		N/A	N/A	N/A	N/A
								11	12	-	-	15	-	-	18	19	-						
MX150 ASSY RCP 2X10 CS BK A/13	334722538	A-BK-CLIP	GCP	PLR		M	R	-	-	-	-	5	6	7	8	-	-	SALEABLE		N/A	N/A	N/A	N/A
								-	-	-	-	15	-	-	18	19	-						
MX150 ASSY RCP 2X10 CS BK A/11	334722539	A-BK-CLIP	GCP	PLR		M	R	-	-	-	4	5	6	7	8	9	10	SALEABLE		N/A	N/A	N/A	N/A
								11	12	-	-	-	-	-	-	-	-						
MX150 ASSY RCP 2X10 BK A/15	334722540	A-BK	GCP	PLR		M	R	-	-	-	-	-	6	-	-	-	-	SALEABLE		N/A	N/A	N/A	N/A
								-	-	-	-	-	-	17	18	19	20						
MX150 ASSY RCP 2X10 BK A/12	334722541	A-BK	GCP	PLR		M	R	-	2	-	-	-	6	7	-	-	10	SALEABLE		N/A	N/A	N/A	N/A
								-	-	-	-	-	-	17	18	19	20						
MX150 ASSY RCP 2X10 BK A/10	334722542	A-BK	GCP	PLR		M	R	-	2	3	-	-	6	7	-	-	10	SALEABLE		N/A	N/A	N/A	N/A
								11	-	-	-	-	-	17	18	19	20						
MX150 ASSY RCP 2X10 BK A/10	334722543	A-BK	GCP	PLR		M	R	1	2	-	-	-	6	7	8	-	10	SALEABLE		N/A	N/A	N/A	N/A
								-	-	-	-	-	-	17	18	19	20						
MX150 ASSY RCP 2X10 BK A/8	334722544	A-BK	GCP	PLR		M	R	1	2	3	-	-	6	7	8	-	10	SALEABLE		N/A	N/A	N/A	N/A
								11	-	-	-	-	-	17	18	19	20						
MX150 ASSY RCP 2X10 BK A/14	334722545	A-BK	GCP	PLR		M	R	-	-	3	-	-	-	-	-	-	-	SALEABLE		N/A	N/A	N/A	N/A
								11	-	-	-	-	-	17	18	19	20						
MX150 ASSY RCP 2X10 BK A/12	334722546	A-BK	GCP	PLR		M	R	1	-	3	-	-	-	-	8	-	-	SALEABLE		N/A	N/A	N/A	N/A
								11	-	-	-	-	-	17	18	19	20						
MX150 ASSY RCP 2X10 BK A/9	334722547	A-BK	GCP	PLR		M	R	1	2	3	-	-	-	7	8	-	10	SALEABLE		N/A	N/A	N/A	N/A
								11	-	-	-	-	-	17	18	19	20						
MX150 ASSY RCP 2X10 BK A/16	334722548	A-BK	GCP	PLR		M	R	-	-	3	-	-	6	-	-	-	-	SALEABLE		N/A	N/A	N/A	N/A
								-	12	13	-	-	-	-	-	-	-						
MX150 ASSY RCP 2X10 BK A/12	334722549	A-BK	GCP	PLR		M	R	1	-	3	-	5	6	7	-	-	-	SALEABLE		N/A	N/A	N/A	N/A
								11	12	13	-	-	-	-	-	-	-						
MX150 ASSY RCP 2X10 BK A/14	334722550	A-BK	GCP	PLR		M	R	-	-	3	-	5	6	-	-	-	-	SALEABLE		N/A	N/A	N/A	N/A
								11	12	13	-	-	-	-	-	-	-						
MX150 ASSY RCP 2X10 BK A/12	334722551	A-BK	GCP	PLR		M	R	-	-	-	-	5	-	-	8	-	-	SALEABLE		N/A	N/A	N/A	N/A
								11	-	-	14	-	16	17	-	19	20						
MX150 ASSY RCP 2X10 BK A/14	334722552	A-BK	GCP	PLR		M	R	-	2	3	-	-	6	-	8	-	-	SALEABLE		N/A	N/A	N/A	N/A
								-	12	13	-	-	-	-	-	-	-						
MX150 ASSY RCP 2X10 BK A/10	334722553	A-BK	GCP	PLR		M	R	1	2	3	-	5	6	7	8	-	-	SALEABLE		N/A	N/A	N/A	N/A
								11	12	13	-	-	-	-	-	-	-						
MX150 ASSY RCP 2X10 BK A/12	334722554	A-BK	GCP	PLR		M	R	-	2	3	-	5	6	-	8	-	-	SALEABLE		N/A	N/A	N/A	N/A
								11	12	13	-	-	-	-	-	-	-						
MX150 ASSY RCP 2X10 BK A/14	334722555	A-BK	GCP	PLR		M	R	1	-	-	-	-	-	-	-	9	10	SALEABLE		N/A	N/A	N/A	N/A
								11	12	-	-	-	-	-	-	-	20						
MX150 ASSY RCP 2X10 BK A/12	334722556	A-BK	GCP	PLR		M	R	1	-	3	4	-	-	-	-	9	10	SALEABLE		N/A	N/A	N/A	N/A
								11	12	-	-	-	-	-	-	-	20						
MX150 ASSY RCP 2X10 BK A/8	334722557	A-BK	GCP	PLR		M	R	1	-	3	4	5	6	7	8	9	10	SALEABLE		N/A	N/A	N/A	N/A
								11	12	-	-	-	-	-	-	-	20						
MX150 ASSY RCP 2X10 CPA BK A/12	334722558	A-BK	GCP	PLR	CPA	M	R	-	-	-	-	5	-	-	-	9	-	SALEABLE		N/A	N/A	N/A	N/A
								-	12	-	-	15	16	-	18	19	20						
MX150 ASSY RCP 2X10 CPA LG B/6	334722559	B-LG	GCP	PLR	CPA	M	R	-	-	-	-	5	6	7	8	9	10	SALEABLE		N/A	N/A	N/A	N/A
								11	12	13	14	-	-	17	18	19	20						
MX150 ASSY RCP 2X10 CPA LG B/8	334722560	B-LG	GCP	PLR	CPA	M	R	1	2	3	4	5	6	7	8	-	-	SALEABLE		N/A	N/A	N/A	N/A
								-	-	13	-	-	16	-	-	19	20						
MX150 ASSY RCP 2X10 BK A/10	334722561	A-BK	GCP	PLR		M	R	1	2	3	-	-	6	7	-	-	10	SALEABLE		N/A	N/A	N/A	N/A
								11	12	-	-	-	16	-	-	19	-						
MX150 ASSY RCP 2X10 BK A/15	334722562	A-BK	GCP	PLR		M	R	-	2	3	-	-	6	-	-	-	10	SALEABLE		N/A	N/A	N/A	N/A
								-	12	-	-	-	-	-	-	-	-						

molex

MX150 RECEPTACLE 2X10 SEALED ASSEMBLY MAT SEAL
BOM AND PIN OUT SHEET

ASSEMBLY DESCRIPTION	ASSEMBLY PART NUMBER	COMPONENT THE PRESENCE OF AN ABBREVIATION INDICATES THE PRESENCE OF THAT COMPONENT						BLOCKED TERMINALS CAVITY WITH A NUMBER INDICATES BLOCKED TERMINAL POSITION CAVITY WITHOUT A NUMBER INDICATES OPEN TERMINAL POSITION										STATUS	COMMENT	OPTIONAL ATTACHMENTS SOLD SEPARATELY			
		HOUSING KEY/COLOR	GROMMET CAP	PLR	CPA	MAT SEAL	RING SEAL													BACKSHELL WITH RIBS	BACKSHELL WITHOUT RIBS	90^0 ADAPTOR WITH RIBS	90^0 ADAPTOR WITHOUT RIBS
MX150 ASSY RCP 2X10 BK A/3	334722563	A-BK	GCP	PLR		M	R	1	2	3	4	5	6	-	8	-	10	SALEABLE		N/A	N/A	N/A	N/A
								11	12	13	14	15	16	-	18	19	20						
MX150 ASSY RCP 2X10 BK A/16	334722564	A-BK	GCP	PLR		M	R	1	-	-	-	-	-	-	8	-	-	SALEABLE		N/A	N/A	N/A	N/A
								11	-	-	-	-	-	-	-	-	20						
MX150 ASSY RCP 2X10 BK A/13	334722565	A-BK	GCP	PLR		M	R	1	-	-	-	-	6	7	8	9	-	SALEABLE		N/A	N/A	N/A	N/A
								11	-	-	-	-	-	-	-	-	20						
MX150 ASSY RCP 2X10 LG B/17	334722566	B-LG	GCP	PLR		M	R	-	-	-	-	5	6	-	-	-	-	SALEABLE		N/A	N/A	N/A	N/A
								-	-	-	-	-	-	-	-	19	-						
MX150 ASSY RCP 2X10 LG B/18	334722567	B-LG	GCP	PLR		M	R	-	-	3	-	-	-	-	-	-	-	SALEABLE		N/A	N/A	N/A	N/A
								-	-	-	14	-	-	-	-	-	-						
MX150 ASSY RCP 2X10 BK A/17	334722568	A-BK	GCP	PLR		M	R	-	-	3	-	-	-	-	8	-	-	SALEABLE		N/A	N/A	N/A	N/A
								-	-	-	-	-	-	-	-	-	20						
MX150 ASSY RCP 2X10 BK A/15	334722569	A-BK	GCP	PLR		M	R	-	-	-	-	-	-	-	-	9	10	SALEABLE		N/A	N/A	N/A	N/A
								11	12	-	-	-	-	-	-	-	20						
MX150 ASSY RCP 2X10 BK A/16	334722570	A-BK	GCP	PLR		M	R	1	-	-	-	-	-	-	-	-	-	SALEABLE		N/A	N/A	N/A	N/A
								11	-	-	-	-	-	-	-	19	20						
MX150 ASSY RCP 2X10 BK A/6	334722571	A-BK	GCP	PLR		M	R	1	-	-	-	-	-	-	8	9	10	SALEABLE		N/A	N/A	N/A	N/A
								11	12	13	14	15	16	17	18	19	20						
MX150 ASSY RCP 2X10 BK A/15	334722572	A-BK	GCP	PLR		M	R	1	-	-	-	-	6	-	-	-	-	SALEABLE		N/A	N/A	N/A	N/A
								11	-	-	-	-	-	-	-	19	20						
MX150 ASSY RCP 2X10 BK A/5	334722573	A-BK	GCP	PLR		M	R	1	-	-	-	-	6	-	8	9	10	SALEABLE		N/A	N/A	N/A	N/A
								11	12	13	14	15	16	17	18	19	20						
MX150 ASSY RCP 2X10 BK A/8	334722574	A-BK	GCP	PLR		M	R	1	-	-	-	-	-	-	8	9	10	SALEABLE		N/A	N/A	N/A	N/A
								-	12	-	14	15	16	17	18	19	20						
MX150 ASSY RCP 2X10 BK A/12	334722575	A-BK	GCP	PLR		M	R	1	-	-	-	-	-	-	-	-	-	SALEABLE		N/A	N/A	N/A	N/A
								-	-	-	14	15	16	17	18	19	20						
MX150 ASSY RCP 2X10 BK A/11	334722576	A-BK	GCP	PLR		M	R	1	-	-	-	-	6	-	-	-	-	SALEABLE		N/A	N/A	N/A	N/A
								-	-	-	14	15	16	17	18	19	20						
MX150 ASSY RCP 2X10 BK A/7	334722577	A-BK	GCP	PLR		M	R	1	-	-	-	-	6	-	8	9	10	SALEABLE		N/A	N/A	N/A	N/A
								-	12	-	14	15	16	17	18	19	20						
MX150 ASSY RCP 2X10 BK A/16	334722578	A-BK	GCP	PLR		M	R	1	2	3	-	-	-	-	-	9	-	SALEABLE		N/A	N/A	N/A	N/A
								-	-	-	-	-	-	-	-	-	-						
MX150 ASSY RCP 2X10 BK A/11	334722579	A-BK	GCP	PLR		M	R	1	2	3	-	-	-	-	-	-	-	SALEABLE		N/A	N/A	N/A	N/A
								-	-	13	14	15	16	17	18	-	-						
MX150 ASSY RCP 2X10 BK A/18	334722580	A-BK	GCP	PLR		M	R	-	-	3	-	-	-	-	-	9	-	SALEABLE		N/A	N/A	N/A	N/A
								-	-	-	-	-	-	-	-	-	-						
MX150 ASSY RCP 2X10 BK A/12	334722581	A-BK	GCP	PLR		M	R	-	-	3	-	-	-	-	-	9	-	SALEABLE		N/A	N/A	N/A	N/A
								-	-	13	14	15	16	17	18	-	-						
MX150 ASSY RCP 2X10 BK A/9	334722582	A-BK	GCP	PLR		M	R	1	-	3	-	-	6	7	8	-	10	SALEABLE		N/A	N/A	N/A	N/A
								11	-	-	-	-	-	17	18	19	20						
MX150 ASSY RCP 2X10 BK A/6	334722583	A-BK	GCP	PLR		M	R	1	-	3	4	5	6	7	8	-	10	SALEABLE		N/A	N/A	N/A	N/A
								11	12	-	-	-	-	17	18	19	20						
MX150 ASSY RCP 2X10 BK A/5	334722584	A-BK	GCP	PLR		M	R	1	2	3	4	5	6	7	8	-	10	SALEABLE		N/A	N/A	N/A	N/A
								11	12	-	-	-	-	17	18	19	20						
MX150 ASSY RCP 2X10 BK A/9	334722585	A-BK	GCP	PLR		M	R	1	-	3	4	5	-	-	-	-	10	SALEABLE		N/A	N/A	N/A	N/A
								11	12	-	-	-	-	17	18	19	20						
MX150 ASSY RCP 2X10 BK A/8	334722586	A-BK	GCP	PLR		M	R	1	-	3	4	5	-	-	8	-	10	SALEABLE		N/A	N/A	N/A	N/A
								11	12	-	-	-	-	17	18	19	20						
MX150 ASSY RCP 2X10 BK A/7	334722587	A-BK	GCP	PLR		M	R	1	2	3	4	5	-	-	8	-	10	SALEABLE		N/A	N/A	N/A	N/A
								11	12	-	-	-	-	17	18	19	20						
MX150 ASSY RCP 2X10 BK A/11	334722588	A-BK	GCP	PLR		M	R	1	-	3	-	-	-	-	8	-	10	SALEABLE		N/A	N/A	N/A	N/A
								11	-	-	-	-	-	17	18	19	20						
MX150 ASSY RCP 2X10 BK A/8	334722589	A-BK	GCP	PLR		M	R	1	2	3	4	5	-	-	-	-	10	SALEABLE		N/A	N/A	N/A	N/A
								11	12	-	-	-	-	17	18	19	20						

molex

MX150 RECEPTACLE 2X10 SEALED ASSEMBLY MAT SEAL
BOM AND PIN OUT SHEET

ASSEMBLY DESCRIPTION	ASSEMBLY PART NUMBER	COMPONENT						BLOCKED TERMINALS										STATUS	COMMENT	OPTIONAL ATTACHMENTS SOLD SEPARATELY			
		THE PRESENCE OF AN ABBREVIATION INDICATES THE PRESENCE OF THAT COMPONENT						CAVITY WITH A NUMBER INDICATES BLOCKED TERMINAL POSITION CAVITY WITHOUT A NUMBER INDICATES OPEN TERMINAL POSITION															
		HOUSING KEY/COLOR	GROMMET CAP	PLR	CPA	MAT SEAL	RING SEAL													BACKSHELL WITH RIBS	BACKSHELL WITHOUT RIBS	90^0 ADAPTOR WITH RIBS	90^0 ADAPTOR WITHOUT RIBS
MX150 ASSY RCP 2X10 BK A/8	334722590	A-BK	GCP	PLR		M	R	-	2	3	4	-	-	7	8	-	-	SALEABLE		N/A	N/A	N/A	N/A
								-	12	-	-	15	16	17	18	19	20						
MX150 ASSY RCP 2X10 BK A/14	334722591	A-BK	GCP	PLR		M	R	-	-	-	-	5	-	-	8	-	-	SALEABLE		N/A	N/A	N/A	N/A
								11	-	-	14	-	16	17	-	-	-						
MX150 ASSY RCP 2X10 BK A/15	334722592	A-BK	GCP	PLR		M	R	-	-	-	4	-	6	-	-	-	-	SALEABLE		N/A	N/A	N/A	N/A
								11	12	13	-	-	-	-	-	-	-						
MX150 ASSY RCP 2X10 BK A/10	334722593	A-BK	GCP	PLR		M	R	-	2	-	4	5	-	-	-	9	-	SALEABLE		N/A	N/A	N/A	N/A
								11	12	13	14	15	16	-	-	-	-						
MX150 ASSY RCP 2X10 BK A/17	334722594	A-BK	GCP	PLR		M	R	-	-	3	-	-	-	-	-	9	-	SALEABLE		N/A	N/A	N/A	N/A
								-	-	-	-	-	-	-	-	-	20						
MX150 ASSY RCP 2X10 BK A/9	334722595	A-BK	GCP	PLR		M	R	1	2	-	4	5	-	-	-	-	10	SALEABLE		N/A	N/A	N/A	N/A
								11	12	-	-	-	-	17	18	19	20						
MX150 ASSY RCP 2X10 BK A/12	334722596	A-BK	GCP	PLR		M	R	1	-	-	-	-	-	-	8	-	10	SALEABLE		N/A	N/A	N/A	N/A
								11	-	-	-	-	-	17	18	19	20						
MX150 ASSY RCP 2X10 BK A/8	334722597	A-BK	GCP	PLR		M	R	1	2	-	4	5	-	-	8	-	10	SALEABLE		N/A	N/A	N/A	N/A
								11	12	-	-	-	-	17	18	19	20						
MX150 ASSY RCP 2X10 BK A/9	334722598	A-BK	GCP	PLR		M	R	1	-	-	4	5	-	-	8	-	10	SALEABLE		N/A	N/A	N/A	N/A
								11	12	-	-	-	-	17	18	19	20						
MX150 ASSY RCP 2X10 BK A/13	334722599	A-BK	GCP	PLR		M	R	1	-	-	4	5	-	-	-	-	-	SALEABLE		N/A	N/A	N/A	N/A
								11	12	-	-	-	-	17	18	-	-						
MX150 ASSY RCP 2X10 BK A/6	334722600	A-BK	GCP	PLR		M	R	1	2	-	4	5	6	7	8	-	10	SALEABLE		N/A	N/A	N/A	N/A
								11	12	-	-	-	-	17	18	19	20						
MX150 ASSY RCP 2X10 BK A/9	334722601	A-BK	GCP	PLR		M	R	1	2	-	-	-	6	7	8	-	10	SALEABLE		N/A	N/A	N/A	N/A
								11	-	-	-	-	-	17	18	19	20						
MX150 ASSY RCP 2X10 BK A/7	334722602	A-BK	GCP	PLR		M	R	1	-	-	4	5	6	7	8	-	10	SALEABLE		N/A	N/A	N/A	N/A
								11	12	-	-	-	-	17	18	19	20						
MX150 ASSY RCP 2X10 BK A/10	334722603	A-BK	GCP	PLR		M	R	1	-	-	-	-	6	7	8	-	10	SALEABLE		N/A	N/A	N/A	N/A
								11	-	-	-	-	-	17	18	19	20						
MX150 ASSY RCP 2X10 CPA BK A/14	334722604	A-BK	GCP	PLR	CPA	M	R	-	-	-	-	-	-	-	8	9	-	SALEABLE		N/A	N/A	N/A	N/A
								-	-	-	-	-	-	17	18	19	20						
MX150 ASSY RCP 2X10 CPA BK A/18	334722605	A-BK	GCP	PLR	CPA	M	R	-	-	-	-	-	-	-	-	-	10	SALEABLE		N/A	N/A	N/A	N/A
								-	-	-	-	15	-	-	-	-	-						
MX150 ASSY RCP 2X10 LG B/18	334722606	B-LG	GCP	PLR		M	R	-	-	-	-	-	6	-	-	-	-	SALEABLE		N/A	N/A	N/A	N/A
								-	-	-	-	-	-	-	-	19	-						
MX150 ASSY RCP 2X10 BK A/18	334722607	A-BK	GCP	PLR		M	R	-	-	-	-	-	6	-	-	-	-	SALEABLE		N/A	N/A	N/A	N/A
								-	-	-	-	-	-	-	-	19	-						
MX150 ASSY RCP 2X10 BK A/10	334722608	A-BK	GCP	PLR		M	R	1	-	-	4	5	-	-	-	-	10	SALEABLE		N/A	N/A	N/A	N/A
								11	12	-	-	-	-	17	18	19	20						
MX150 ASSY RCP 2X10 BK A/12	334722609	A-BK	GCP	PLR		M	R	-	-	-	-	5	6	-	-	-	-	SALEABLE		N/A	N/A	N/A	N/A
								11	12	13	-	-	-	-	18	19	20						
MX150 ASSY RCP 2X10 BK A/8	334722610	A-BK	GCP	PLR		M	R	-	-	-	4	5	6	-	-	-	10	SALEABLE		N/A	N/A	N/A	N/A
								11	12	13	-	-	16	17	18	19	20						
MX150 ASSY RCP 2X10 CS BK A/11	334722611	A-BK-CLIP	GCP	PLR		M	R	-	-	-	-	5	6	7	8	9	-	SALEABLE		N/A	N/A	N/A	N/A
								11	12	-	-	-	-	17	18	-	-						
MX150 ASSY RCP 2X10 BK A/10	334722612	A-BK	GCP	PLR		M	R	1	2	3	-	-	-	-	-	9	-	SALEABLE		N/A	N/A	N/A	N/A
								-	-	13	14	15	16	17	18	-	-						
MX150 ASSY RCP 2X10 BK A/11	334722613	A-BK	GCP	PLR		M	R	1	2	-	-	-	-	-	8	-	10	SALEABLE		N/A	N/A	N/A	N/A
								11	-	-	-	-	-	17	18	19	20						
MX150 ASSY RCP 2X10 BK A/8	334722614	A-BK	GCP	PLR		M	R	-	-	-	-	-	-	7	8	9	10	SALEABLE		N/A	N/A	N/A	N/A
								11	12	13	14	15	16	17	18	-	-						
MX150 ASSY RCP 2X10 BK A/13	334722615	A-BK	GCP	PLR		M	R	-	-	3	-	-	-	-	-	-	-	SALEABLE		N/A	N/A	N/A	N/A
								11	-	-	-	-	16	17	18	19	20						
MX150 ASSY RCP 2X10 LG B/8	334722616	B-LG	GCP	PLR		M	R	-	2	-	-	-	-	-	-	-	10	SALEABLE		N/A	N/A	N/A	N/A
								11	12	13	14	15	16	17	18	19	20						

molex

MX150 RECEPTACLE 2X10 SEALED ASSEMBLY MAT SEAL
BOM AND PIN OUT SHEET

ASSEMBLY DESCRIPTION	ASSEMBLY PART NUMBER	COMPONENT: THE PRESENCE OF AN ABBREVIATION INDICATES THE PRESENCE OF THAT COMPONENT						BLOCKED TERMINALS: CAVITY WITH A NUMBER INDICATES BLOCKED TERMINAL POSITION CAVITY WITHOUT A NUMBER INDICATES OPEN TERMINAL POSITION										STATUS	COMMENT	OPTIONAL ATTACHMENTS SOLD SEPARATELY			
		HOUSING KEY/COLOR	GROMMET CAP	PLR	CPA	MAT SEAL	RING SEAL													BACKSHELL WITH RIBS	BACKSHELL WITHOUT RIBS	90^0 ADAPTOR WITH RIBS	90^0 ADAPTOR WITHOUT RIBS
MX150 ASSY RCP 2X10 CS CPA BK A/12	334722617	A-BK-CLIP	GCP	PLR	CPA	M	R	-	2	-	-	-	-	7	8	9	-	SALEABLE		N/A	N/A	N/A	N/A
								-	12	-	-	15	-	-	18	19	-						
MX150 ASSY RCP 2X10 CPA BK A/18	334722618	A-BK	GCP	PLR	CPA	M	R	1	-	-	-	-	-	-	-	-	-	SALEABLE		N/A	N/A	N/A	N/A
								-	-	-	-	-	-	-	18	-	-						
MX150 ASSY RCP 2X10 CPA BK A/12	334722619	A-BK	GCP	PLR	CPA	M	R	1	2	-	-	5	6	7	8	-	-	SALEABLE		N/A	N/A	N/A	N/A
								-	-	-	-	-	-	17	18	-	-						
MX150 ASSY RCP 2X10 CPA BK A/12	334722620	A-BK	GCP	PLR	CPA	M	R	-	2	-	-	5	6	7	8	-	-	SALEABLE		N/A	N/A	N/A	N/A
								-	-	-	-	-	-	-	18	19	20						
MX150 ASSY RCP 2X10 CPA BK A/6	334722621	A-BK	GCP	PLR	CPA	M	R	1	2	-	-	5	6	7	8	9	10	SALEABLE		N/A	N/A	N/A	N/A
								11	12	13	14	-	-	17	18	-	-						
MX150 ASSY RCP 2X10 BK A/14	334722622	A-BK	GCP	PLR		M	R	-	-	-	-	-	-	-	-	9	10	SALEABLE		N/A	N/A	N/A	N/A
								11	-	-	14	-	-	17	18	-	-						
MX150 ASSY RCP 2X10 BK A/16	334722623	A-BK	GCP	PLR		M	R	-	-	-	-	-	-	-	-	9	10	SALEABLE		N/A	N/A	N/A	N/A
								11	-	-	14	-	-	-	-	-	-						
MX150 ASSY RCP 2X10 BK A/15	334722624	A-BK	GCP	PLR		M	R	-	-	-	-	-	-	-	8	9	10	SALEABLE		N/A	N/A	N/A	N/A
								11	-	-	14	-	-	-	-	-	-						
MX150 ASSY RCP 2X10 BK A/14	334722625	A-BK	GCP	PLR		M	R	-	-	-	-	-	-	-	8	9	10	SALEABLE		N/A	N/A	N/A	N/A
								-	-	-	14	-	-	17	18	-	-						
MX150 ASSY RCP 2X10 CS BK A/8	334722626	A-BK-CLIP	GCP	PLR		M	R	1	2	3	4	5	6	-	8	-	-	SALEABLE		N/A	N/A	N/A	N/A
								-	-	13	-	-	-	17	18	19	20						
MX150 ASSY RCP 2X10 CS BK A/10	334722627	A-BK-CLIP	GCP	PLR		M	R	1	2	3	4	5	6	-	8	-	-	SALEABLE		N/A	N/A	N/A	N/A
								-	-	13	-	-	-	-	-	19	20						
MX150 ASSY RCP 2X10 CS BK A/14	334722628	A-BK-CLIP	GCP	PLR		M	R	-	-	-	-	-	-	7	-	9	-	SALEABLE		N/A	N/A	N/A	N/A
								-	-	-	14	15	-	-	-	19	20						
MX150 ASSY RCP 2X10 CPA BK A/12	334722629	A-BK	GCP	PLR	CPA	M	R	-	2	-	-	-	-	-	8	9	-	SALEABLE		N/A	N/A	N/A	N/A
								-	-	13	14	-	-	-	18	19	20						
MX150 ASSY RCP 2X10 CPA BK A/14	334722630	A-BK	GCP	PLR	CPA	M	R	-	2	-	-	-	-	-	-	-	-	SALEABLE		N/A	N/A	N/A	N/A
								-	-	13	14	-	-	-	18	19	20						
MX150 ASSY RCP 2X10 CPA BK A/16	334722631	A-BK	GCP	PLR	CPA	M	R	-	-	3	-	-	6	-	8	9	-	SALEABLE		N/A	N/A	N/A	N/A
								-	-	-	-	-	-	-	-	-	-						
MX150 ASSY RCP 2X10 CS CPA BK A/10	334722632	A-BK-CLIP	GCP	PLR	CPA	M	R	-	2	3	-	-	6	-	-	-	-	SALEABLE		N/A	N/A	N/A	N/A
								11	12	-	-	-	16	17	18	19	20						
MX150 ASSY RCP 2X10 BK A/6	334722633	A-BK	GCP	PLR		M	R	-	-	-	4	5	-	-	-	9	10	SALEABLE		N/A	N/A	N/A	N/A
								11	12	13	14	15	16	17	18	19	20						
MX150 ASSY RCP 2X10 CS BK A/10	334722634	A-BK-CLIP	GCP	PLR		M	R	1	-	-	-	-	-	7	8	-	10	SALEABLE		N/A	N/A	N/A	N/A
								11	-	13	-	15	-	-	18	19	20						
MX150 ASSY RCP 2X10 CS CPA BK A/19	334722635	A-BK-CLIP	GCP	PLR	CPA	M	R	1	-	-	-	-	-	-	-	-	-	SALEABLE		N/A	N/A	N/A	N/A
								-	-	-	-	-	-	-	-	-	-						
MX150 ASSY RCP 2X10 CS CPA LG B/19	334722637	B-LG-CLIP	GCP	PLR	CPA	M	R	1	-	-	-	-	-	-	-	-	-	SALEABLE		N/A	N/A	N/A	N/A
								-	-	-	-	-	-	-	-	-	-						
MX150 ASSY RCP 2X10 CPA DG C/19	334722638	C-DG	GCP	PLR	CPA	M	R	1	-	-	-	-	-	-	-	-	-	SALEABLE		N/A	N/A	N/A	N/A
								-	-	-	-	-	-	-	-	-	-						
MX150 ASSY RCP 2X10 CS DG C/19	334722639	C-DG-CLIP	GCP	PLR		M	R	1	-	-	-	-	-	-	-	-	-	SALEABLE		N/A	N/A	N/A	N/A
								-	-	-	-	-	-	-	-	-	-						
MX150 ASSY RCP 2X10 DG C/19	334722640	C-DG	GCP	PLR		M	R	1	-	-	-	-	-	-	-	-	-	SALEABLE		N/A	N/A	N/A	N/A
								-	-	-	-	-	-	-	-	-	-						
MX150 ASSY RCP 2X10 CS SG D/19	334722642	D-SG-CLIP	GCP	PLR		M	R	1	-	-	-	-	-	-	-	-	-	SALEABLE		N/A	N/A	N/A	N/A
								-	-	-	-	-	-	-	-	-	-						
MX150 ASSY RCP 2X10 SG D/19	334722643	D-SG	GCP	PLR		M	R	1	-	-	-	-	-	-	-	-	-	SALEABLE		N/A	N/A	N/A	N/A
								-	-	-	-	-	-	-	-	-	-						
MX150 ASSY RCP 2X10 CS CPA SG D/19	334722644	D-SG-CLIP	GCP	PLR	CPA	M	R	1	-	-	-	-	-	-	-	-	-	SALEABLE		N/A	N/A	N/A	N/A
								-	-	-	-	-	-	-	-	-	-						
MX150 ASSY RCP 2X10 CPA SG D/19	334722645	D-SG	GCP	PLR	CPA	M	R	1	-	-	-	-	-	-	-	-	-	SALEABLE		N/A	N/A	N/A	N/A
								-	-	-	-	-	-	-	-	-	-						

molex

MX150 RECEPTACLE 2X10 SEALED ASSEMBLY MAT SEAL
BOM AND PIN OUT SHEET

ASSEMBLY DESCRIPTION	ASSEMBLY PART NUMBER	COMPONENT						BLOCKED TERMINALS										STATUS	COMMENT	OPTIONAL ATTACHMENTS SOLD SEPARATELY			
		THE PRESENCE OF AN ABBREVIATION INDICATES THE PRESENCE OF THAT COMPONENT						CAVITY WITH A NUMBER INDICATES BLOCKED TERMINAL POSITION CAVITY WITHOUT A NUMBER INDICATES OPEN TERMINAL POSITION															
		HOUSING KEY/COLOR	GROMMET CAP	PLR	CPA	MAT SEAL	RING SEAL													BACKSHELL WITH RIBS	BACKSHELL WITHOUT RIBS	90^0 ADAPTOR WITH RIBS	90^0 ADAPTOR WITHOUT RIBS
MX150 ASSY RCP 2X10 CPA BK A/13	334722646	A-BK	GCP	PLR	CPA	M	R	-	2	-	-	-	-	-	-	-	-	SALEABLE		N/A	N/A	N/A	N/A
								11	12	-	-	-	16	17	18	19	-						
MX150 ASSY RCP 2X10 BK A/12	334722647	A-BK	GCP	PLR		M	R	-	-	-	-	-	-	-	-	9	-	SALEABLE		N/A	N/A	N/A	N/A
								-	12	13	-	15	16	17	18	19	-						
MX150 ASSY RCP 2X10 CS CPA BK A/17	334722648	A-BK-CLIP	GCP	PLR	CPA	M	R	1	2	-	4	-	-	-	-	-	-	SALEABLE		N/A	N/A	N/A	N/A
								-	-	-	-	-	-	-	-	-	-						
MX150 ASSY RCP 2X10 CS CPA BK A/16	334722649	A-BK-CLIP	GCP	PLR	CPA	M	R	-	-	-	-	-	-	-	-	-	-	SALEABLE		N/A	N/A	N/A	N/A
								-	12	13	14	-	-	-	-	-	20						
MX150 ASSY RCP 2X10 CS CPA BK A/11	334722650	A-BK-CLIP	GCP	PLR	CPA	M	R	1	2	-	-	5	-	-	-	9	-	SALEABLE		N/A	N/A	N/A	N/A
								-	-	13	14	15	16	17	-	-	-						
MX150 ASSY RCP 2X10 CS CPA LG B/11	334722651	B-LG-CLIP	GCP	PLR	CPA	M	R	1	2	-	-	5	-	-	-	9	-	SALEABLE		N/A	N/A	N/A	N/A
								-	-	13	14	15	16	17	-	-	-						
MX150 ASSY RCP 2X10 BK A/16	334722652	A-BK	GCP	PLR		M	R	1	2	-	-	-	-	-	-	-	-	SALEABLE		N/A	N/A	N/A	N/A
								-	-	-	-	-	-	-	-	19	20						
MX150 ASSY RCP 2X10 CS BK A/13	334722653	A-BK-CLIP	GCP	PLR		M	R	-	-	3	-	-	-	-	-	-	-	SALEABLE		N/A	N/A	N/A	N/A
								11	-	-	-	-	16	17	18	19	20						
MX150 ASSY RCP 2X10 CS CPA BK A/3	334722654	A-BK-CLIP	GCP	PLR	CPA	M	R	1	-	3	4	5	6	7	8	-	-	SALEABLE		N/A	N/A	N/A	N/A
								11	12	13	14	15	16	17	18	19	20						
MX150 ASSY RCP 2X10 CS CPA BK A/17	334722655	A-BK-CLIP	GCP	PLR	CPA	M	R	1	-	-	4	-	-	-	-	-	-	SALEABLE		N/A	N/A	N/A	N/A
								-	-	13	-	-	-	-	-	-	-						
MX150 ASSY RCP 2X10 CS CPA BK A/8	334722656	A-BK-CLIP	GCP	PLR	CPA	M	R	1	-	3	-	-	-	-	-	9	10	SALEABLE		N/A	N/A	N/A	N/A
								11	12	13	-	-	16	17	18	19	20						
MX150 ASSY RCP 2X10 CPA BK A/14	334722657	A-BK	GCP	PLR	CPA	M	R	-	2	-	-	5	6	7	8	-	-	SALEABLE		N/A	N/A	N/A	N/A
								-	-	-	-	-	-	-	18	-	-						
MX150 ASSY RCP 2X10 BK A/13	334722658	A-BK	GCP	PLR		M	R	-	-	-	-	-	-	-	-	9	-	SALEABLE		N/A	N/A	N/A	N/A
								-	12	13	-	-	16	17	18	19	-						
MX150 ASSY RCP 2X10 CPA BK A/13	334722659	A-BK	GCP	PLR	CPA	M	R	-	-	-	-	-	-	-	-	9	-	SALEABLE		N/A	N/A	N/A	N/A
								-	12	13	-	-	16	17	18	19	-						
MX150 ASSY RCP 2X10 CPA BK A/9	334722660	A-BK	GCP	PLR	CPA	M	R	1	2	-	-	-	-	-	-	-	-	SALEABLE		N/A	N/A	N/A	N/A
								-	12	13	14	15	16	17	18	19	20						
MX150 ASSY RCP 2X10 LG B/9	334722661	B-LG	GCP	PLR		M	R	1	2	3	4	-	-	7	8	9	-	SALEABLE		N/A	N/A	N/A	N/A
								-	12	13	-	-	-	-	18	19	-						
MX150 ASSY RCP 2X10 LG B/15	334722662	B-LG	GCP	PLR		M	R	-	-	3	4	-	-	7	-	-	-	SALEABLE		N/A	N/A	N/A	N/A
								-	-	13	-	-	-	-	18	-	-						
MX150 ASSY RCP 2X10 LG B/17	334722663	B-LG	GCP	PLR		M	R	-	-	-	4	-	-	7	-	-	-	SALEABLE		N/A	N/A	N/A	N/A
								-	-	-	-	-	-	-	18	-	-						
MX150 ASSY RCP 2X10 CPA BK A/12	334722664	A-BK	GCP	PLR	CPA	M	R	1	2	-	-	5	6	7	8	-	-	SALEABLE		N/A	N/A	N/A	N/A
								-	-	-	-	-	-	-	-	19	20						
MX150 ASSY RCP 2X10 CPA BK A/14	334722665	A-BK	GCP	PLR	CPA	M	R	-	-	-	-	5	6	7	8	-	-	SALEABLE		N/A	N/A	N/A	N/A
								-	-	-	-	-	-	-	-	19	20						
MX150 ASSY RCP 2X10 BK A/14	334722666	A-BK	GCP	PLR		M	R	-	-	-	-	-	-	7	-	9	-	SALEABLE		N/A	N/A	N/A	N/A
								-	-	-	14	15	-	-	-	19	20						
MX150 ASSY RCP 2X10 CS BK A/16	334722667	A-BK-CLIP	GCP	PLR		M	R	1	2	-	-	-	-	-	-	-	-	SALEABLE		N/A	N/A	N/A	N/A
								-	-	-	-	-	-	-	-	19	20						
MX150 ASSY RCP 2X10 BK A/15	334722668	A-BK	GCP	PLR		M	R	-	2	-	4	5	-	-	-	9	-	SALEABLE		N/A	N/A	N/A	N/A
								-	-	-	-	-	16	-	-	-	-						
MX150 ASSY RCP 2X10 CPA BK A/11	334722669	A-BK	GCP	PLR	CPA	M	R	-	-	-	-	-	-	-	8	-	-	SALEABLE		N/A	N/A	N/A	N/A
								11	12	-	-	15	16	17	18	19	20						
MX150 ASSY RCP 2X10 LG B/6	334722670	B-LG	GCP	PLR		M	R	1	2	3	4	5	6	7	8	9	-	SALEABLE		N/A	N/A	N/A	N/A
								-	12	13	-	-	-	-	18	19	20						
MX150 ASSY RCP 2X10 LG B/12	334722671	B-LG	GCP	PLR		M	R	-	-	3	4	5	6	7	-	-	-	SALEABLE		N/A	N/A	N/A	N/A
								-	-	13	-	-	-	-	18	-	20						
MX150 ASSY RCP 2X10 LG B/14	334722672	B-LG	GCP	PLR		M	R	-	-	-	4	5	6	7	-	-	-	SALEABLE		N/A	N/A	N/A	N/A
								-	-	-	-	-	-	-	18	-	20						

molex

MX150 RECEPTACLE 2X10 SEALED ASSEMBLY MAT SEAL
BOM AND PIN OUT SHEET

ASSEMBLY DESCRIPTION	ASSEMBLY PART NUMBER	COMPONENT						BLOCKED TERMINALS										STATUS	COMMENT	OPTIONAL ATTACHMENTS SOLD SEPARATELY			
		THE PRESENCE OF AN ABBREVIATION INDICATES THE PRESENCE OF THAT COMPONENT						CAVITY WITH A NUMBER INDICATES BLOCKED TERMINAL POSITION CAVITY WITHOUT A NUMBER INDICATES OPEN TERMINAL POSITION															
		HOUSING KEY/COLOR	GROMMET CAP	PLR	CPA	MAT SEAL	RING SEAL													BACKSHELL WITH RIBS	BACKSHELL WITHOUT RIBS	90^0 ADAPTOR WITH RIBS	90^0 ADAPTOR WITHOUT RIBS
MX150 ASSY RCP 2X10 CPA BK A/17	334722673	A-BK	GCP	PLR	CPA	M	R	-	-	-	-	-	-	-	8	-	-	SALEABLE		N/A	N/A	N/A	N/A
								11	12	-	-	-	-	-	-	-	-						
MX150 ASSY RCP 2X10 CPA LG B/0	334722674	B-LG	GCP	PLR	CPA	M	R	1	2	3	4	5	6	7	8	9	10	SALEABLE		N/A	N/A	N/A	N/A
								11	12	13	14	15	16	17	18	19	20						
MX150 ASSY RCP 2X10 CPA LG B/13	334722675	B-LG	GCP	PLR	CPA	M	R	-	2	3	4	-	-	7	-	-	-	SALEABLE		N/A	N/A	N/A	N/A
								-	12	13	-	15	-	-	-	-	-						
MX150 ASSY RCP 2X10 CPA BK A/16	334722676	A-BK	GCP	PLR	CPA	M	R	-	-	-	-	-	6	-	8	9	-	SALEABLE		N/A	N/A	N/A	N/A
								-	-	13	-	-	-	-	-	-	-						
MX150 ASSY RCP 2X10 CPA BK A/11	334722677	A-BK	GCP	PLR	CPA	M	R	1	2	-	-	-	-	-	-	-	-	SALEABLE		N/A	N/A	N/A	N/A
								-	-	-	14	15	16	17	18	19	20						
MX150 ASSY RCP 2X10 CPA BK A/11	334722678	A-BK	GCP	PLR	CPA	M	R	1	2	-	-	5	-	-	-	9	-	SALEABLE		N/A	N/A	N/A	N/A
								-	-	13	14	15	16	17	-	-	-						
MX150 ASSY RCP 2X10 BK A/8	334722679	A-BK	GCP	PLR		M	R	1	2	3	4	5	6	-	8	-	-	SALEABLE		N/A	N/A	N/A	N/A
								-	-	13	-	-	-	17	18	19	20						
MX150 ASSY RCP 2X10 BK A/10	334722680	A-BK	GCP	PLR		M	R	1	2	3	4	5	6	-	8	-	-	SALEABLE		N/A	N/A	N/A	N/A
								-	-	13	-	-	-	-	-	19	20						
MX150 ASSY RCP 2X10 BK A/13	334722681	A-BK	GCP	PLR		M	R	-	-	-	-	-	-	-	8	-	-	SALEABLE		N/A	N/A	N/A	N/A
								-	-	-	-	15	16	17	18	19	20						
MX150 ASSY RCP 2X10 CPA BK A/13	334722682	A-BK	GCP	PLR	CPA	M	R	-	-	-	-	-	-	-	8	-	-	SALEABLE		N/A	N/A	N/A	N/A
								-	-	-	-	15	16	17	18	19	20						
MX150 ASSY RCP 2X10 CPA BK A/9	334722683	A-BK	GCP	PLR	CPA	M	R	-	-	-	-	5	6	-	-	-	10	SALEABLE		N/A	N/A	N/A	N/A
								-	12	13	-	15	16	17	18	19	20						
MX150 ASSY RCP 2X10 BK A/8	334722684	A-BK	GCP	PLR		M	R	1	2	-	-	-	-	-	-	9	10	SALEABLE		N/A	N/A	N/A	N/A
								-	-	13	14	15	16	17	18	19	20						
MX150 ASSY RCP 2X10 BK A/8	334722685	A-BK	GCP	PLR		M	R	1	2	-	-	-	-	-	-	-	-	SALEABLE		N/A	N/A	N/A	N/A
								11	12	13	14	15	16	17	18	19	20						
MX150 ASSY RCP 2X10 BK A/19	334722686	A-BK	GCP	PLR		M	R	-	-	3	-	-	-	-	-	-	-	SALEABLE		N/A	N/A	N/A	N/A
								-	-	-	-	-	-	-	-	-	-						
MX150 ASSY RCP 2X10 BK A/18	334722687	A-BK	GCP	PLR		M	R	-	-	-	-	-	-	-	-	9	10	SALEABLE		N/A	N/A	N/A	N/A
								-	-	-	-	-	-	-	-	-	-						
MX150 ASSY RCP 2X10 CPA BK A/10	334722688	A-BK	GCP	PLR	CPA	M	R	1	2	-	-	-	-	7	8	9	10	SALEABLE		N/A	N/A	N/A	N/A
								11	12	-	-	-	-	17	18	-	-						
MX150 ASSY RCP 2X10 BK A/13	334722689	A-BK	GCP	PLR		M	R	-	-	-	-	-	6	-	8	9	-	SALEABLE		N/A	N/A	N/A	N/A
								11	-	-	14	15	16	-	-	-	-						
MX150 ASSY RCP 2X10 BK A/18	334722690	A-BK	GCP	PLR		M	R	1	-	-	-	-	-	-	-	-	-	SALEABLE		N/A	N/A	N/A	N/A
								-	-	-	-	-	-	-	-	-	20						
MX150 ASSY RCP 2X10 CS CPA BK A/15	334722691	A-BK-CLIP	GCP	PLR	CPA	M	R	-	2	-	-	-	-	-	-	-	-	SALEABLE		N/A	N/A	N/A	N/A
								-	12	-	-	15	-	-	18	19	-						
MX150 ASSY RCP 2X10 CPA BK A/2	334722692	A-BK	GCP	PLR	CPA	M	R	-	2	3	4	5	6	7	8	9	10	SALEABLE		N/A	N/A	N/A	N/A
								11	12	13	14	15	-	17	18	19	20						
MX150 ASSY RCP 2X10 CPA BK A/6	334722693	A-BK	GCP	PLR	CPA	M	R	-	2	3	4	5	6	7	8	9	10	SALEABLE		N/A	N/A	N/A	N/A
								-	-	-	-	15	-	17	18	19	20						
MX150 ASSY RCP 2X10 CS CPA BK A/14	334722694	A-BK-CLIP	GCP	PLR	CPA	M	R	-	2	-	-	-	-	7	-	-	-	SALEABLE		N/A	N/A	N/A	N/A
								-	12	-	-	15	-	-	18	19	-						
MX150 ASSY RCP 2X10 CPA BK A/10	334722695	A-BK	GCP	PLR	CPA	M	R	-	-	-	-	5	6	-	-	-	-	SALEABLE		N/A	N/A	N/A	N/A
								-	12	13	-	15	16	17	18	19	20						
MX150 ASSY RCP 2X10 CS CPA YW A/14	334722696	A-YW-CLIP	GCP	PLR	CPA	M	R	-	2	-	-	-	-	7	-	-	-	SALEABLE		N/A	N/A	N/A	N/A
								-	12	-	-	15	-	-	18	19	-						
MX150 ASSY RCP 2X10 CPA BK A/8	334722697	A-BK	GCP	PLR	CPA	M	R	1	-	-	-	-	-	-	-	-	10	SALEABLE		N/A	N/A	N/A	N/A
								11	12	13	14	15	16	17	18	19	20						
MX150 ASSY RCP 2X10 CPA BK A/14	334722698	A-BK	GCP	PLR	CPA	M	R	-	-	-	-	-	-	-	-	-	-	SALEABLE		N/A	N/A	N/A	N/A
								-	-	13	14	15	-	-	18	19	20						
MX150 ASSY RCP 2X10 CPA BK A/17	334722699	A-BK	GCP	PLR	CPA	M	R	-	-	-	-	-	-	7	-	-	-	SALEABLE		N/A	N/A	N/A	N/A
								-	-	-	-	-	-	-	-	19	20						

molex

MX150 RECEPTACLE 2X10 SEALED ASSEMBLY MAT SEAL
BOM AND PIN OUT SHEET

ASSEMBLY DESCRIPTION	ASSEMBLY PART NUMBER	COMPONENT THE PRESENCE OF AN ABBREVIATION INDICATES THE PRESENCE OF THAT COMPONENT						BLOCKED TERMINALS CAVITY WITH A NUMBER INDICATES BLOCKED TERMINAL POSITION CAVITY WITHOUT A NUMBER INDICATES OPEN TERMINAL POSITION										STATUS	COMMENT	OPTIONAL ATTACHMENTS SOLD SEPARATELY			
		HOUSING KEY/COLOR	GROMMET CAP	PLR	CPA	MAT SEAL	RING SEAL													BACKSHELL WITH RIBS	BACKSHELL WITHOUT RIBS	90^0 ADAPTOR WITH RIBS	90^0 ADAPTOR WITHOUT RIBS
MX150 ASSY RCP 2X10 CPA BK A/9	334722700	A-BK	GCP	PLR	CPA	M	R	-	-	-	4	5	6	-	8	9	-	SALEABLE		N/A	N/A	N/A	N/A
								-	-	-	14	15	16	17	18	19	-						
MX150 ASSY RCP 2X10 CS BK A/10	334722701	A-BK-CLIP	GCP	PLR		M	R	-	2	-	-	-	-	-	8	9	10	SALEABLE		N/A	N/A	N/A	N/A
								11	-	-	-	-	16	17	18	19	20						
MX150 ASSY RCP 2X10 CS CPA LG B/15	334722702	B-LG-CLIP	GCP	PLR	CPA	M	R	1	-	3	-	5	-	-	-	-	-	SALEABLE		N/A	N/A	N/A	N/A
								-	-	-	14	15	-	-	-	-	-						
MX150 ASSY RCP 2X10 BK A/7	334722703	A-BK	GCP	PLR		M	R	-	-	3	-	5	6	7	8	-	10	SALEABLE		N/A	N/A	N/A	N/A
								-	12	13	-	15	16	17	18	-	20						
MX150 ASSY RCP 2X10 CPA BK A/16	334722704	A-BK	GCP	PLR	CPA	M	R	1	2	-	-	-	-	-	-	-	-	SALEABLE		N/A	N/A	N/A	N/A
								-	-	-	-	-	-	-	-	19	20						
MX150 ASSY RCP 2X10 BK A/15	334722705	A-BK	GCP	PLR		M	R	1	2	-	-	-	-	-	-	-	-	SALEABLE		N/A	N/A	N/A	N/A
								-	-	-	-	-	-	-	18	19	20						
MX150 ASSY RCP 2X10 CS BK A/17	334722706	A-BK-CLIP	GCP	PLR		M	R	-	2	-	-	5	6	-	-	-	-	SALEABLE		N/A	N/A	N/A	N/A
								-	-	-	-	-	-	-	-	-	-						
MX150 ASSY RCP 2X10 CS BK A/15	334722707	A-BK-CLIP	GCP	PLR		M	R	-	2	-	-	5	6	7	-	-	-	SALEABLE		N/A	N/A	N/A	N/A
								-	-	-	14	-	-	-	-	-	-						
MX150 ASSY RCP 2X10 CS BK A/15	334722708	A-BK-CLIP	GCP	PLR		M	R	-	2	-	-	5	6	-	-	-	-	SALEABLE		N/A	N/A	N/A	N/A
								11	-	-	-	-	-	-	-	-	20						
MX150 ASSY RCP 2X10 CS BK A/14	334722709	A-BK-CLIP	GCP	PLR		M	R	-	2	3	-	5	6	-	-	-	-	SALEABLE		N/A	N/A	N/A	N/A
								-	12	-	-	-	-	-	-	19	-						
MX150 ASSY RCP 2X10 CS BK A/12	334722710	A-BK-CLIP	GCP	PLR		M	R	-	2	3	-	5	6	7	-	-	-	SALEABLE		N/A	N/A	N/A	N/A
								-	12	-	14	-	-	-	-	19	-						
MX150 ASSY RCP 2X10 CS BK A/13	334722711	A-BK-CLIP	GCP	PLR		M	R	-	2	-	-	5	6	7	-	-	-	SALEABLE		N/A	N/A	N/A	N/A
								11	-	-	14	-	-	-	-	-	20						
MX150 ASSY RCP 2X10 CS BK A/4	334722712	A-BK-CLIP	GCP	PLR		M	R	-	2	3	4	5	6	7	8	9	10	SALEABLE		N/A	N/A	N/A	N/A
								11	12	13	14	-	-	17	-	19	20						
MX150 ASSY RCP 2X10 CS BK A/7	334722713	A-BK-CLIP	GCP	PLR		M	R	-	2	-	4	5	6	7	8	9	10	SALEABLE		N/A	N/A	N/A	N/A
								11	-	13	14	-	-	17	-	-	20						
MX150 ASSY RCP 2X10 CS BK A/6	334722714	A-BK-CLIP	GCP	PLR		M	R	-	2	3	4	5	6	7	8	9	10	SALEABLE		N/A	N/A	N/A	N/A
								-	12	13	14	-	-	17	-	19	-						
MX150 ASSY RCP 2X10 CS BK A/9	334722715	A-BK-CLIP	GCP	PLR		M	R	-	2	-	4	5	6	7	8	9	10	SALEABLE		N/A	N/A	N/A	N/A
								-	-	13	14	-	-	17	-	-	-						
MX150 ASSY RCP 2X10 CS BK A/12	334722716	A-BK-CLIP	GCP	PLR		M	R	-	2	3	-	5	6	-	-	-	-	SALEABLE		N/A	N/A	N/A	N/A
								11	12	-	-	-	-	-	-	19	20						
MX150 ASSY RCP 2X10 CS BK A/10	334722717	A-BK-CLIP	GCP	PLR		M	R	-	2	3	-	5	6	7	-	-	-	SALEABLE		N/A	N/A	N/A	N/A
								11	12	-	14	-	-	-	-	19	20						
MX150 ASSY RCP 2X10 CPA BK A/11	334722718	A-BK	GCP	PLR	CPA	M	R	-	-	-	-	-	-	-	8	-	-	SALEABLE		N/A	N/A	N/A	N/A
								-	-	13	14	15	16	17	18	19	20						
MX150 ASSY RCP 2X10 CS BK A/14	334722719	A-BK-CLIP	GCP	PLR		M	R	-	2	-	-	-	-	7	-	-	-	SALEABLE		N/A	N/A	N/A	N/A
								-	12	-	-	15	-	-	18	19	-						
MX150 ASSY RCP 2X10 CS BK A/8	334722720	A-BK-CLIP	GCP	PLR		M	R	-	-	3	4	5	-	7	-	9	-	SALEABLE		N/A	N/A	N/A	N/A
								11	12	13	-	15	-	17	-	19	20						
MX150 ASSY RCP 2X10 CS CPA BK A/12	334722721	A-BK-CLIP	GCP	PLR	CPA	M	R	-	-	-	-	-	-	7	8	-	-	SALEABLE		N/A	N/A	N/A	N/A
								-	12	13	14	15	16	17	-	-	-						
MX150 ASSY RCP 2X10 CPA BK A/12	334722722	A-BK	GCP	PLR	CPA	M	R	-	-	-	-	-	-	7	8	-	-	SALEABLE		N/A	N/A	N/A	N/A
								-	12	13	14	15	16	17	-	-	-						
MX150 ASSY RCP 2X10 BK A/8	334722723	A-BK	GCP	PLR		M	R	-	-	3	4	5	-	7	-	9	-	SALEABLE		N/A	N/A	N/A	N/A
								11	12	13	-	15	-	17	-	19	20						
MX150 ASSY RCP 2X10 CPA BK A/15	334722724	A-BK	GCP	PLR	CPA	M	R	-	-	3	4	-	-	-	-	-	-	SALEABLE		N/A	N/A	N/A	N/A
								-	-	13	14	-	-	-	-	-	20						
MX150 ASSY RCP 2X10 CPA BK A/17	334722725	A-BK	GCP	PLR	CPA	M	R	-	-	-	-	-	-	-	-	-	-	SALEABLE		N/A	N/A	N/A	N/A
								-	-	-	-	-	-	17	18	19	-						
MX150 ASSY RCP 2X10 CS CPA BK A/13	334722726	A-BK-CLIP	GCP	PLR	CPA	M	R	1	-	-	-	-	-	-	-	-	-	SALEABLE		N/A	N/A	N/A	N/A
								11	-	-	-	-	16	17	18	19	20						

molex

MX150 RECEPTACLE 2X10 SEALED ASSEMBLY MAT SEAL
BOM AND PIN OUT SHEET

ASSEMBLY DESCRIPTION	ASSEMBLY PART NUMBER	COMPONENT THE PRESENCE OF AN ABBREVIATION INDICATES THE PRESENCE OF THAT COMPONENT						BLOCKED TERMINALS CAVITY WITH A NUMBER INDICATES BLOCKED TERMINAL POSITION CAVITY WITHOUT A NUMBER INDICATES OPEN TERMINAL POSITION										STATUS	COMMENT	OPTIONAL ATTACHMENTS SOLD SEPARATELY			
		HOUSING KEY/COLOR	GROMMET CAP	PLR	CPA	MAT SEAL	RING SEAL													BACKSHELL WITH RIBS	BACKSHELL WITHOUT RIBS	90^0 ADAPTOR WITH RIBS	90^0 ADAPTOR WITHOUT RIBS
MX150 ASSY RCP 2X10 BK A/13	334722727	A-BK	GCP	PLR		M	R	-	-	-	-	5	6	7	8	9	-	SALEABLE		N/A	N/A	N/A	N/A
								11	12	-	-	-	-	-	-	-	-						
MX150 ASSY RCP 2X10 CS BK A/13	334722728	A-BK-CLIP	GCP	PLR		M	R	-	-	-	-	5	6	7	8	9	-	SALEABLE		N/A	N/A	N/A	N/A
								11	12	-	-	-	-	-	-	-	-						
MX150 ASSY RCP 2X10 CS BK A/10	334722729	A-BK-CLIP	GCP	PLR		M	R	-	-	-	-	5	6	7	8	9	10	SALEABLE		N/A	N/A	N/A	N/A
								11	12	-	-	15	-	-	-	-	20						
MX150 ASSY RCP 2X10 CS CPA BK A/13	334722730	A-BK-CLIP	GCP	PLR	CPA	M	R	-	-	-	-	-	6	-	-	9	-	SALEABLE		N/A	N/A	N/A	N/A
								11	-	-	14	-	16	17	-	-	20						
MX150 ASSY RCP 2X10 CS BK A/14	334722731	A-BK-CLIP	GCP	PLR		M	R	1	-	-	-	-	6	-	8	-	-	SALEABLE		N/A	N/A	N/A	N/A
								11	12	13	-	-	-	-	-	-	-						
MX150 ASSY RCP 2X10 BK A/10	334722732	A-BK	GCP	PLR		M	R	-	-	-	4	-	6	-	8	9	-	SALEABLE		N/A	N/A	N/A	N/A
								-	-	-	14	15	16	17	18	19	-						
MX150 ASSY RCP 2X10 CPA BK A/9	334722733	A-BK	GCP	PLR	CPA	M	R	1	-	-	4	-	6	-	-	-	10	SALEABLE		N/A	N/A	N/A	N/A
								11	12	13	14	15	16	-	-	-	20						
MX150 ASSY RCP 2X10 CS CPA BK A/12	334722734	A-BK-CLIP	GCP	PLR	CPA	M	R	-	-	-	4	-	6	-	8	9	-	SALEABLE		N/A	N/A	N/A	N/A
								-	-	-	14	-	16	17	-	19	-						
MX150 ASSY RCP 2X10 BK A/10	334722735	A-BK	GCP	PLR		M	R	-	-	-	-	5	6	7	8	9	10	SALEABLE		N/A	N/A	N/A	N/A
								11	12	-	-	15	-	-	-	-	20						
MX150 ASSY RCP 2X10 BK A/12	334722736	A-BK	GCP	PLR		M	R	-	-	-	4	-	6	-	8	9	-	SALEABLE		N/A	N/A	N/A	N/A
								-	-	-	14	-	16	17	-	19	-						
MX150 ASSY RCP 2X10 LG B/16	334722737	B-LG	GCP	PLR		M	R	1	-	-	4	-	-	-	-	9	-	SALEABLE		N/A	N/A	N/A	N/A
								-	-	13	-	-	-	-	-	-	-						
MX150 ASSY RCP 2X10 LG B/13	334722738	B-LG	GCP	PLR		M	R	1	2	-	4	-	-	-	-	9	-	SALEABLE		N/A	N/A	N/A	N/A
								-	-	13	-	-	-	-	18	19	-						
MX150 ASSY RCP 2X10 BK A/5	334722739	A-BK	GCP	PLR		M	R	1	2	3	-	5	6	-	-	-	10	SALEABLE		N/A	N/A	N/A	N/A
								11	12	-	14	15	16	17	18	19	20						
MX150 ASSY RCP 2X10 CPA BK A/13	334722741	A-BK	GCP	PLR	CPA	M	R	-	-	-	-	5	6	7	8	-	-	SALEABLE		N/A	N/A	N/A	N/A
								-	-	-	14	-	-	-	-	19	20						